PIN #	COLOR
1	WHITE
2	BROWN
3	GREEN
4	YELLOW
5	GRAY
6	PINK
7	BLUE
8	RED

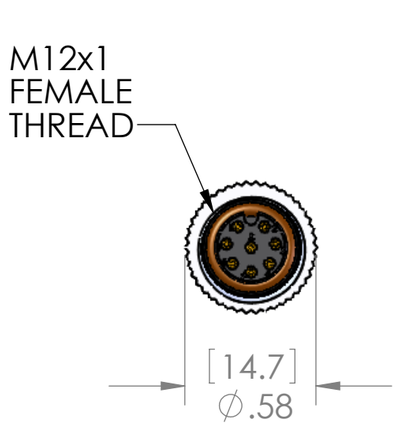

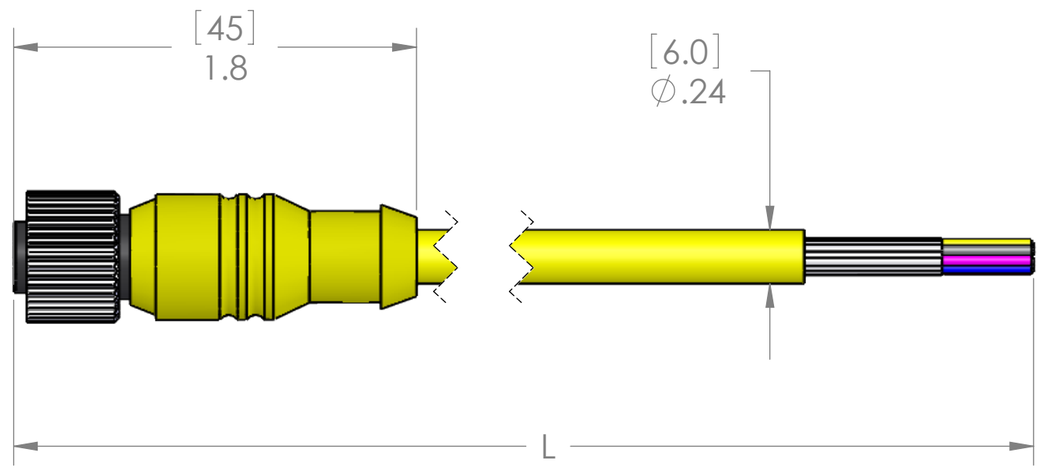

TABLE A		
P/N	L	STD?
MDCM-8FP-1M	40" [1m]	YES
MDCM-8FP-2M	79" [2m]	YES
MDCM-8FP-3M	118" [3m]	NO
MDCM-8FP-4M	157" [4m]	YES
MDCM-8FP-5M	197" [5m]	YES
MDCM-8FP-6M	236" [6m]	YES
MDCM-8FP-8M	315" [8m]	YES
MDCM-8FP-9M	354" [9m]	NO
MDCM-8FP-10M	393" [10m]	YES
MDCM-8FP-15M	590" [15m]	YES
MDCM-8FP-20M	786" [20m]	NO
MDCM-8FP-25M	983" [25m]	NO
MDCM-8FP-30M	1179" [30m]	NO

PARTS LISTED AS NOT BEING STANDARD
MAY HAVE MINIMUM ORDER QUANTITIES

MATERIALS	
BODY:	YELLOW PVC
CONTACTS:	GOLD PLATED COPPER ALLOY
CABLE:	24/8 AWM CABLE PVC YELLOW JACKET
	FOIL SHIELD WITH 24AWG DRAIN
COUPLING:	NICKEL PLATED BRASS
INSERT:	POLYAMIDE
O-RING:	FPM

APPROVALS:	
US:	UL LISTED
CANADA:	C-UL LISTED
RoHS:	YES
CE:	YES

PROPRIETARY AND CONFIDENTIAL

THE INFORMATION CONTAINED IN THIS DRAWING IS THE SOLE PROPERTY OF MENCOM CORPORATION. ANY REPRODUCTION IN PART OR AS A WHOLE WITHOUT THE WRITTEN PERMISSION OF MENCOM CORPORATION IS PROHIBITED.

VOLTS	60V
AMPS	2A
TEMP:	105°C

UNLESS OTHERWISE SPECIFIED:

DIMENSIONS ARE IN INCHES AND [MM]

MATERIAL

FINISH

DO NOT SCALE DRAWING

DRAWN BY	ADM
DRAWN DATE	09/22/2016
CHECKED BY	
CHECK DATE	

COMMENTS:

MENCOM CORPORATION

TITLE:

SIZE	DWG. NO.	REV
B	MDCM-8FP-ZZ	A
SCALE: 3:2	WEIGHT:	SHEET 1 OF 1