REVISIONS			
REV.	DESCRIPTION	DATE	APPROVED
A	RELEASED	11/7/2012	DCT

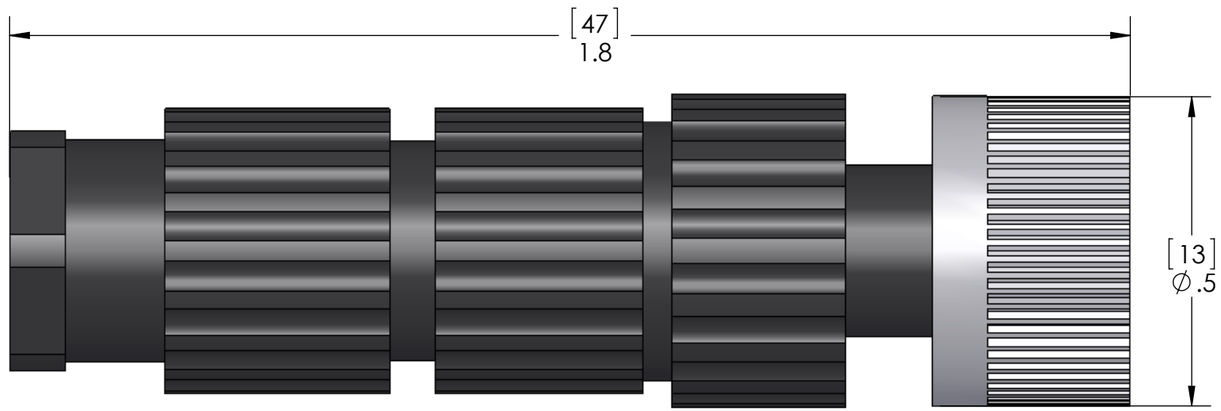

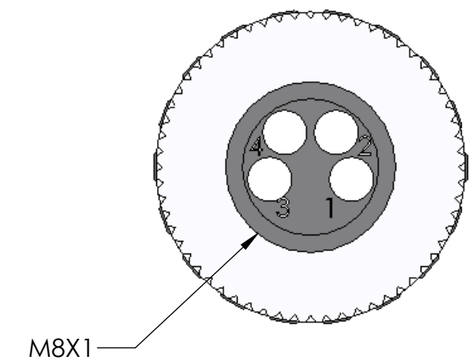

CONNECTION MADE VIA AXIAL PIERCING OF WIRES. NO STRIPPING OF WIRES IS NECESSARY.
WIRE O.D. RANGE 1.0MM - 1.55MM

RATINGS:	
SEAL:	IP67
WIRE RANGE:	0.25 - .034 sqmm
CONTACT RESISTANCE:	6 Ohms max

MATERIALS	
BODY:	**OIL RESISTANT BLACK PVC**
CONTACTS:	**GOLD PLATED COPPER ALLOY**
COUPLING:	**NICKEL PLATED ZINC DIECAST**
INSERT:	**POLYAMIDE**

PROPRIETARY AND CONFIDENTIAL
THE INFORMATION CONTAINED IN THIS DRAWING IS THE SOLE PROPERTY OF MENCOM CORPORATION. ANY REPRODUCTION IN PART OR AS A WHOLE WITHOUT THE WRITTEN PERMISSION OF MENCOM CORPORATION IS PROHIBITED.

UNLESS OTHERWISE SPECIFIED:
DIMENSIONS ARE IN MM
TOLERANCES:
ANGULAR: MACH ±5° BEND ±5°
ONE PLACE DECIMAL ±.2
TWO PLACE DECIMAL ±.1

MATERIAL

FINISH

DO NOT SCALE DRAWING

	NAME
DRAWN	JJH
CHECKED	
ENG APPR.	
MFG APPR.	
Q.A.	
COMMENTS:	

MENCOM CORPORATION

TITLE:

SIZE	DWG. NO.	REV
B	NAN-T-4FP-FW	A

SCALE: 2:1 | WEIGHT: | SHEET 1 OF 1