M-14214 | 1

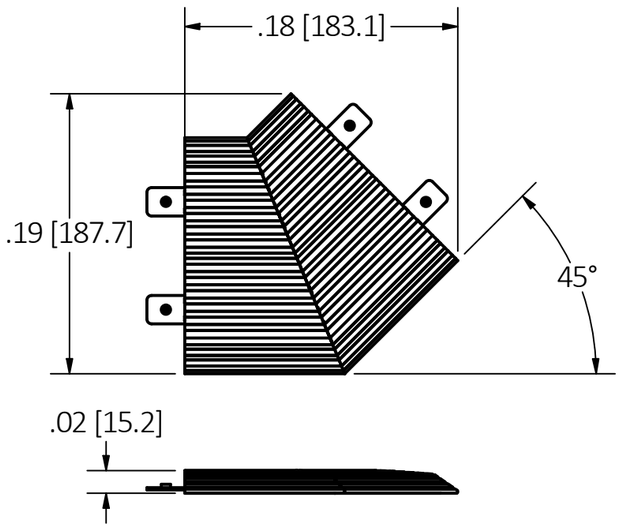

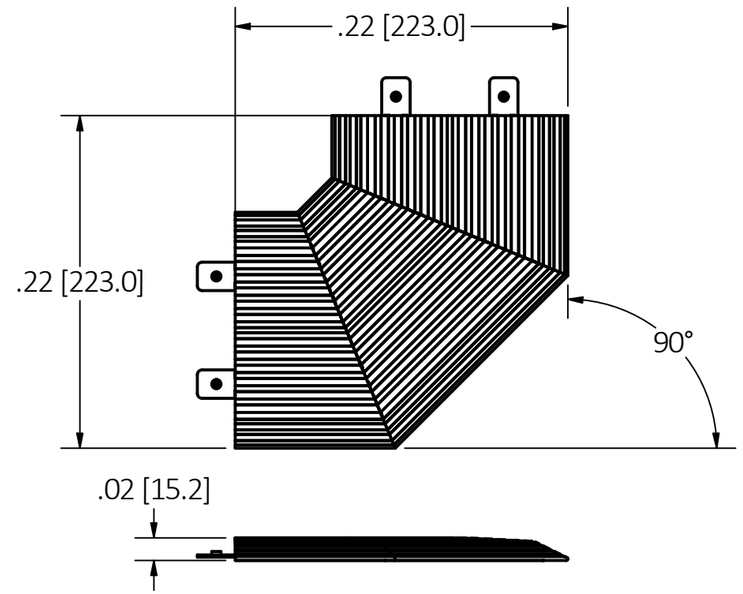

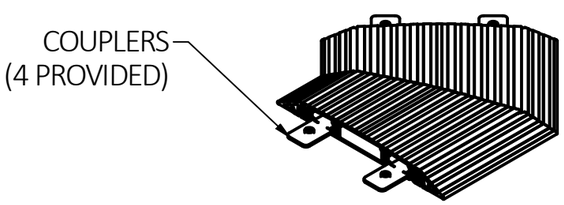

45 DEGREE ELBOW FITTING

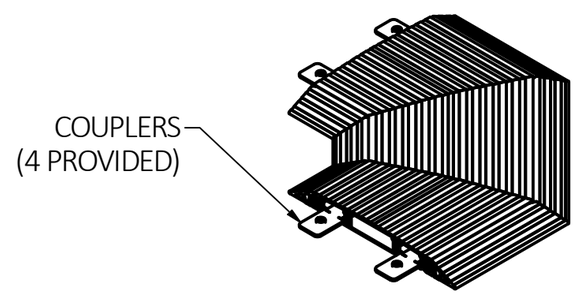

90 DEGREE ELBOW FITTING

NOTES:
1) DIMENSIONS ARE INCHES[MM]
2) THIS RACEWAY FITTING IS INTENDED FOR USE WITH HUBBELL HBLFMRxx SERIES FLOOR MOUNTED RACEWAY SYSTEM.

CAT NO	DESCRIPTION	FINISH
HBLFMC90A	FLOOR MOUNTED RACEWAY ELBOW,90 DEGREE,ALUMINUM	ANODIZED
HBLFMC90DG	FLOOR MOUNTED RACEWAY ELBOW,90 DEGREE, DARK GRAY	POWDER COAT
HBLFMC45A	FLOOR MOUNTED RACEWAY ELBOW,45 DEGREE,ALUMINUM	ANODIZED
HBLFMC45DG	FLOOR MOUNTED RACEWAY ELBOW,45 DEGREE,DARK GRAY	POWDER COAT

CAGE CODE 74545

LIST OF PARTS

DESCRIPTION	MATERIAL	FINISH
ELBOW BASE	ALUMINUM	
ELBOW COVER	ALUMINUM	SEE TABLE
COUPLER	GALV. STEEL	
ELBOW EDGE	THERMOPLASTIC	

DIMENSION SHEET FOR CAT. NO.
SEE TABLE

REV	DESCRIPTION	APP	DATE
1	RELEASED PER DCN# 191120105745	EMD	11/6/19

THE DESIGN AND DIMENSIONS OF THE PRODUCT SHOWN ON THIS DRAWING ARE SUBJECT TO CHANGE WITHOUT NOTICE. DIMENSIONS ARE IN INCHES [mm].

TITLE
ELBOW FITTING, FLOOR MOUNTED RACEWAY

WIRING DEVICE-KELLEMS
HUBBELL INCORPORATED
SHELTON, CT

TOLERANCES UNLESS OTHERWISE SPECIFIED
.XX = ± .01
.XXX= ± .005
ANGLE TOL. ±2'

DR. BY EMD
CHK. BY
SCALE 1 / 4
DATE 11/6/19

B
M-14214
1