M-14216 | 1

NOTES:
1) DIMENSIONS ARE INCHES[MM]
2) THIS RACEWAY FITTING IS INTENDED FOR USE WITH HUBBELL HBLFMRxx SERIES FLOOR MOUNTED RACEWAY SYSTEM.

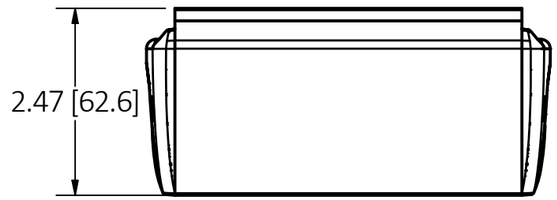

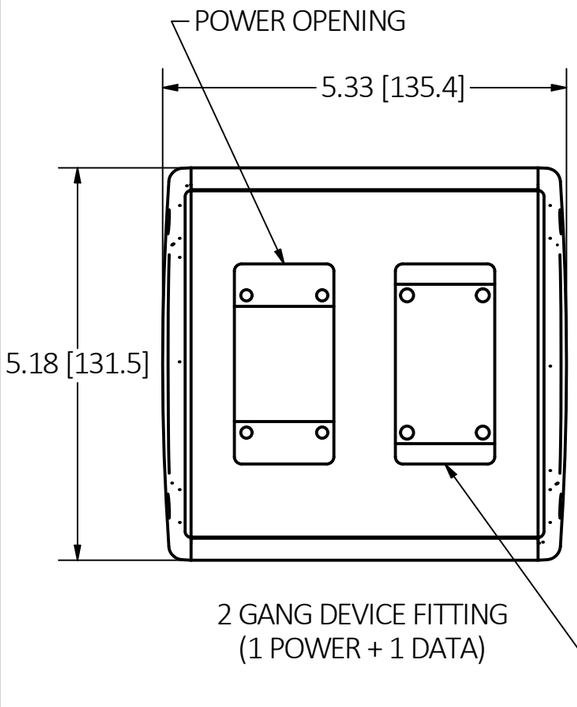

2 GANG DEVICE FITTING
(1 POWER + 1 DATA)

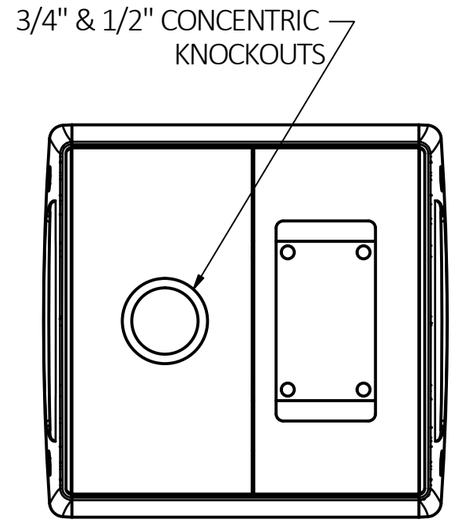

2 GANG DEVICE FITTING
(1 DATA+ 1 KNOCKOUT)

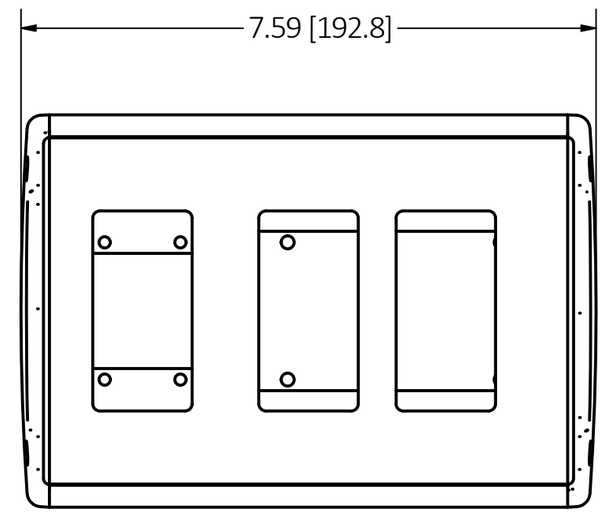

3 GANG DEVICE FITTING
(2 POWER + 1 DATA)

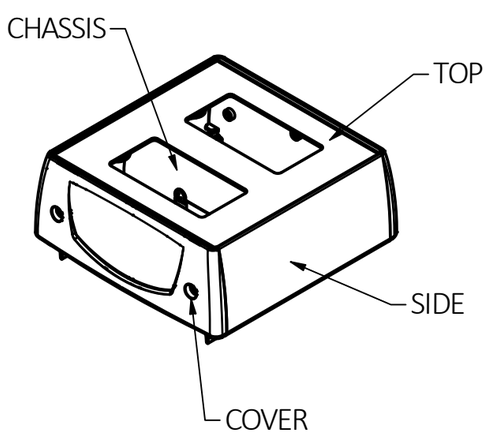

CAT NO	DESCRIPTION	CONFIGURATION
HBLFMD1P1D	FLOOR MOUNTED RACEWAY DEVICE FITTING,2GANG: 1PWR & 1DAT	1 POWER + 1 DATA
HBLFMD2P	FLOOR MOUNTED RACEWAY DEVICE FITTING,2GANG: 2PWR	2 POWER
HBLFMD2D	FLOOR MOUNTED RACEWAY DEVICE FITTING,2GANG: 2DAT	2 DATA
HBLFMD2P1D	FLOOR MOUNTED RACEWAY DEVICE FITTING,3GANG: 2PWR & 1DAT	2 POWER + 1 DATA
HBLFMD1P2D	FLOOR MOUNTED RACEWAY DEVICE FITTING,3GANG: 1PWR & 2DAT	1 POWER + 2 DATA
HBLFMD1D1K	FLOOR MOUNTED RACEWAY DEVICE FITTING,2GANG: 1PWR & 1KO	1 DATA + 1 KNOCKOUT

CAGE CODE 74545

LIST OF PARTS

DESCRIPTION	MATERIAL	FINISH
CHASSIS	GALV. STEEL	
SIDES	ALUMINUM	
COVERS	THERMOPLASTIC	
TOP	STEEL	POWDER COAT
SCREWS (EXT)	STEEL	BLACK
SCREWS (INT)	STEEL	ZINC PLATED

DIMENSION SHEET FOR CAT. NO.
SEE TABLE

REV	DESCRIPTION	APP	DATE
1	RELEASED PER DCN#191120105745	EMD	11/13/19

THE DESIGN AND DIMENSIONS OF THE PRODUCT SHOWN ON THIS DRAWING ARE SUBJECT TO CHANGE WITHOUT NOTICE. DIMENSIONS ARE IN INCHES [mm].

TITLE
DEVICE FITTING, FLOOR MOUNTED RACEWAY

WIRING DEVICE-KELLEMS
HUBBELL INCORPORATED
SHELTON, CT

TOLERANCES UNLESS OTHERWISE SPECIFIED
.XX = ± .01
.XXX= ± .005
ANGLE TOL. ±2'

DR. BY EMD
CHK. BY
SCALE 1 / 2
DATE 11/13/19

B
M-14216
1