MURR ELEKTRONIK
stay connected

M12-PANEL FEED THROUGH 5POLE B CODED, V2A

Control cabinet entry system
Male - female
M12, 5-pole
B-coded
shielded
Stainless steel 1.4305 (V2A)

Link to Product

Illustration

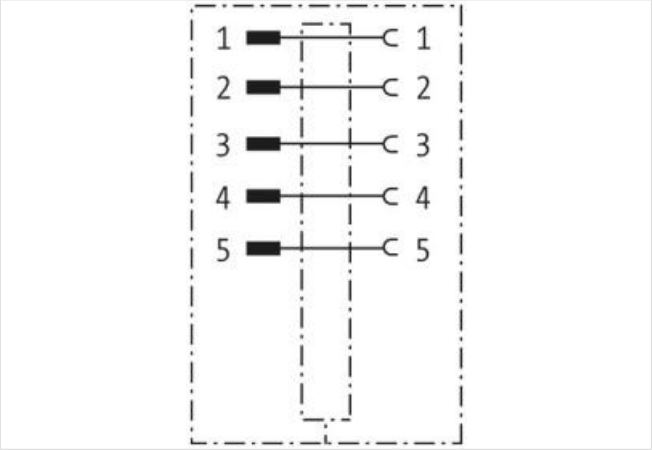

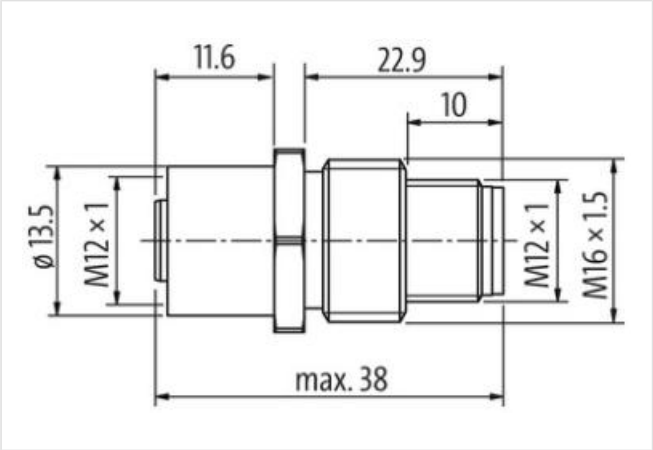

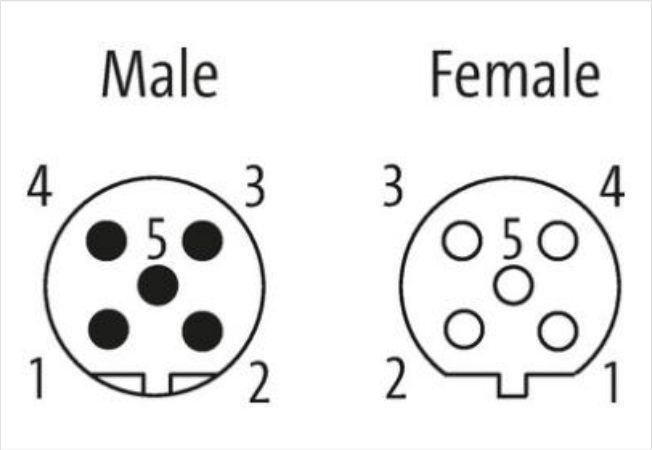

Product may differ from Image

Form	
Form	44111

Technical Data	
Operating voltage	max. 60 V AC/DC
Operating current per contact	max. 4 A
Locking of ports	Screw thread (M12×1 mm) recommended torque 0.6 Nm, self-securing
Protection	IP67 inserted and tightened (EN 60529)
Material	Stainless steel 1.4305 (V2A)

General data	
Temperature range	-25...+85 °C
Mounting set	M16×1.5 mm

The information in this brochure has been compiled with the utmost care.
Liability for the correctness completeness and topicality of the information is restricted to gross negligence. Version: 2022-11-14

Product article number of manufacturer	7002-44111-0000000

The information in this brochure has been compiled with the utmost care.
Liability for the correctness completeness and topicality of the information is restricted to gross negligence. Version: 2022-11-14