DRAWING NO. SD073935

REV	DATE	DESCRIPTION	ECO	BY	C'H'K.
BC	2020-12-15 23:00:00 EST	NOTE ADDED IN SHEET #14, 15 AND 16	2012110031 33	DD	MA

CATALOG NUMBER 3 6	CONDUCTOR SIZE		CONNECTOR DIMENSIONS-LINEAR MEASURE IN,[mm]										INFORMATION	BARREL LETTERING INFORMATION 12
	ALUMINUM	COPPER	STUD SIZE	NO.OF. HOLES	B	C	D	E	Ø K	L	N	O.D	(T)	PLATING	
YA29A1	250 Kcmil-(127mm2) CLASS B CONCENTRIC COMPRESSED COMPACT SIW	250 Kcmil-(127mm2) CLASS B,C CONCENTRIC COMPRESSED COMPACT	1/2	1	1.45 [37]	1.26 [32]	1.36 [35]	--	.56 [14]	3.53 [90]	.63 [16]	.92 [37]	.33 [8]	TIN 3	FIG. 2
YA29A2														NONE	FIG. 1
YA29A3			1/2	2	1.45 [37]	1.26 [32]	3.11 [79]	1.75 [44]	.56 [14]	5.28 [134]	.63 [16]		.33 [8]	TIN 3	FIG. 2
YA29A4														NONE	FIG. 1
YA29A5			3/8		1.45 [37]	1.26 [32]	1.89 [48]	1.00 [25]	.44 [11]	4.06 [103]	.44 [11]		.33 [8]	TIN 3	FIG. 2
YA29A6			5/8	1	1.45 [37]	1.26 [32]	1.52 [39]	--	.69 [18]	3.69 [94]	.75 [19]		.33 [8]	TIN 3	FIG. 2

COLOR CODE	DIE INFORMATION		BURNDY® INSTALLATION TOOLING (#CRIMPS)								DIELESS (#CRIMPS)		STRIP LENGTH
			MECHANICAL		HYDRAULIC								
	DIE INDEX	TYPE	OUR840	MD6	10 Y34A 9 Y34B	9 Y35,Y39 Y750 PAT750	9 Y46 8	9 Y45 7	Y48BH	Y60	MECHANICAL	HYDRAULIC	
RED	324	RED DIE SET	--	--	A29AR (2)	U29ART (2)	U29ART (2)	U29ART (2)	C29AR (1)	L29ART (1)	--	Y81KFT (2) PAT81KFT (2) Y644 (1) PAT644 (1) Y444 (1) PAT444 (1)	1 5/8"
		NEST INDENTOR	--	--	A32D(1) B32D(1) Y34PR-5	--	P32D(1) P34PR-5	--	--	--			

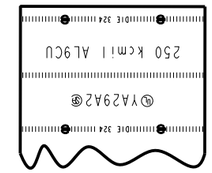

FIG. 1

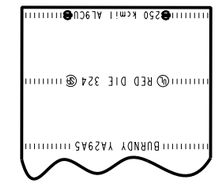

FIG. 2

BARREL LETTERING VIEW 12

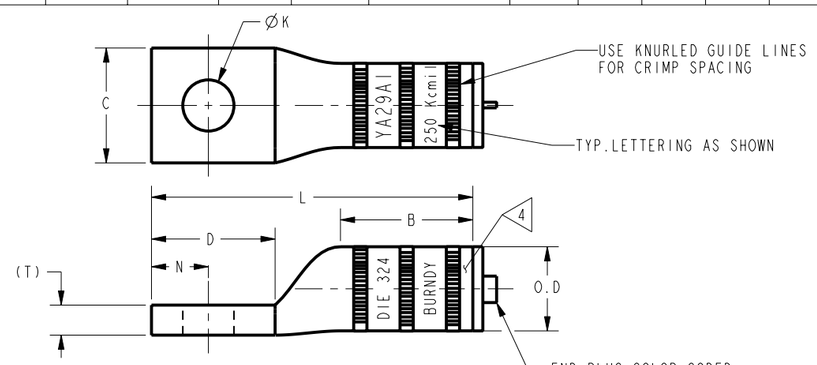

1- HOLE DESIGN

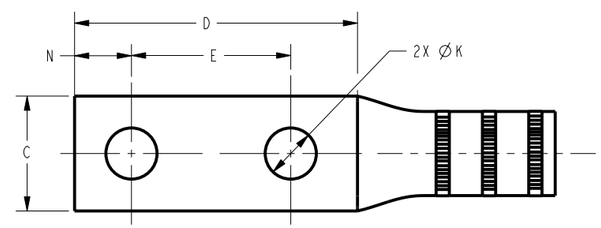

2- HOLE DESIGN

NOTES:

1. ALL HYLUGS™ ACCOMMODATE U.S. STANDARD WASHERS

2. REMOVE ALL EXCESS PENETROX™ FROM CONNECTOR AND ADJACENT CONDUCTOR PRIOR TO TAPING.

3. UL LISTED AND CSA CERTIFIED WIRE CONNECTORS. RATED 90 C (AL9CU) FOR USE WITH COPPER OR ALUMINUM CONDUCTOR. APPROVAL APPLY TO TIN PLATED CONNECTORS ONLY.

4. CONNECTOR BARRELS PREFILLED WITH PENETROX™

5. DIMENSIONS IN BRACKETS [ ] ARE IN MILLIMETERS ROUNDED OFF TO THE NEAREST MILLIMETER , UNLESS OTHERWISE NOTED,AND ARE FOR REFERENCE ONLY.

6. ADD SUFFIX "DT" TO ORDER LUGS WITH CRIMP BARREL SEALED AIR TIGHT INSIDE THE TRANSITION.

7. CATALOG #PT6515 ADAPTOR IS REQUIRED TO USE "U" DIES IN Y45 SERIES TOOLS.

8. CATALOG #PUADP-1 ADAPTOR IS REQUIRED TO USE "U" DIES IN Y46 SERIES TOOLS.

9. Y35P3 INDENTOR ADAPTOR REQUIRED FOR "Y34PR" TYPE INDENTORS.

10. FOR USE BY CUSTOMERS THAT HAVE THIS HYPRESS™ .NO NEW HYPRESSES™ ARE BEING PROCESSED.

11. ADD SUFFIX "U" TO ORDER LUGS WITH UNDRILLED TONGUE.

12. ENLARGED BARREL MARKING VIEW.

UNINSULATED COMPRESSION TERMINAL
MATERIAL: ALUMINUM TUBE

TO ORDER BURNDY® PRODUCTS CALL

UNITED STATES:
1-800-346-4175 (LONDONDERRY, NH)

CANADA:
1-800-361-6975 (QUEBEC)
1-800-387-6487 (ALL OTHER PROVINCES)

FOR PRODUCT INFO: http://www.burndy.com

HYLUG™

ITEM NO: NA

CAT. NO: YA29A-(SEE TABLE)

DRAWN BY: E.S.K	7/20/72	
CHECKER: S.F.P	8/01/72	
DSN APPVL: R.B	8/02/72	
MFG APPVL: --	--	
QA APPVL: D.VARIO	8/19/95	
MKT APPVL: P.WERTHMAN	6/18/95	
PROD FAM: CM&R COMPRESSION		
PROJECT #: --	SIZE	
DOCUMENT TYPE: Sales	C	
REL LEVEL: Released		

BURNDY

SCALE: 1:1

DRAWING NO: SD073935 REV: BC

SHEET 10 OF 24

REV: PE0200