EIXO/SHAFT		
PADRÃO/STANDARD	X	Dimensões em polegadas
OPCIONAL/OPTIONAL		Dimensions in inches
ESPECIAL/SPECIAL		

CERTIFIED
WEG MOTORES
Certified document.
Not subject to changes.

THIS IS AN UPDATED REVISION, THE PREVIOUS ONE MUST BE DISREGARDED.

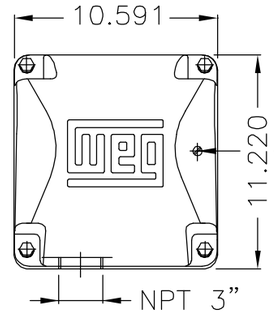

Main terminal box

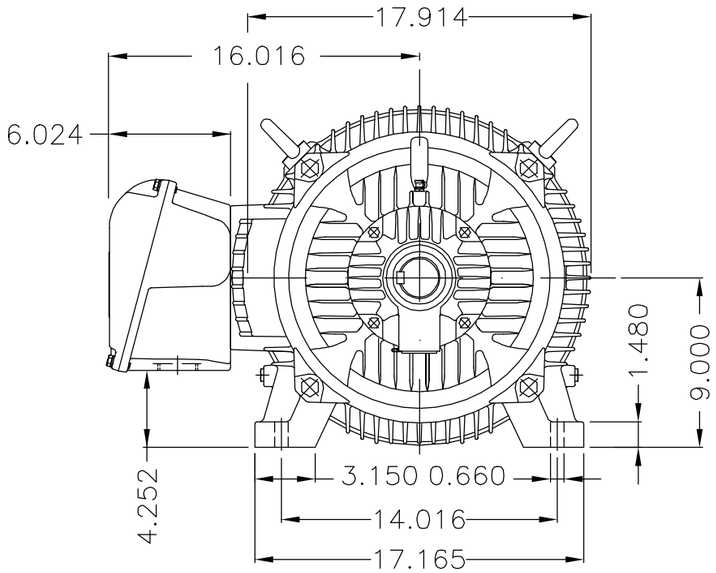

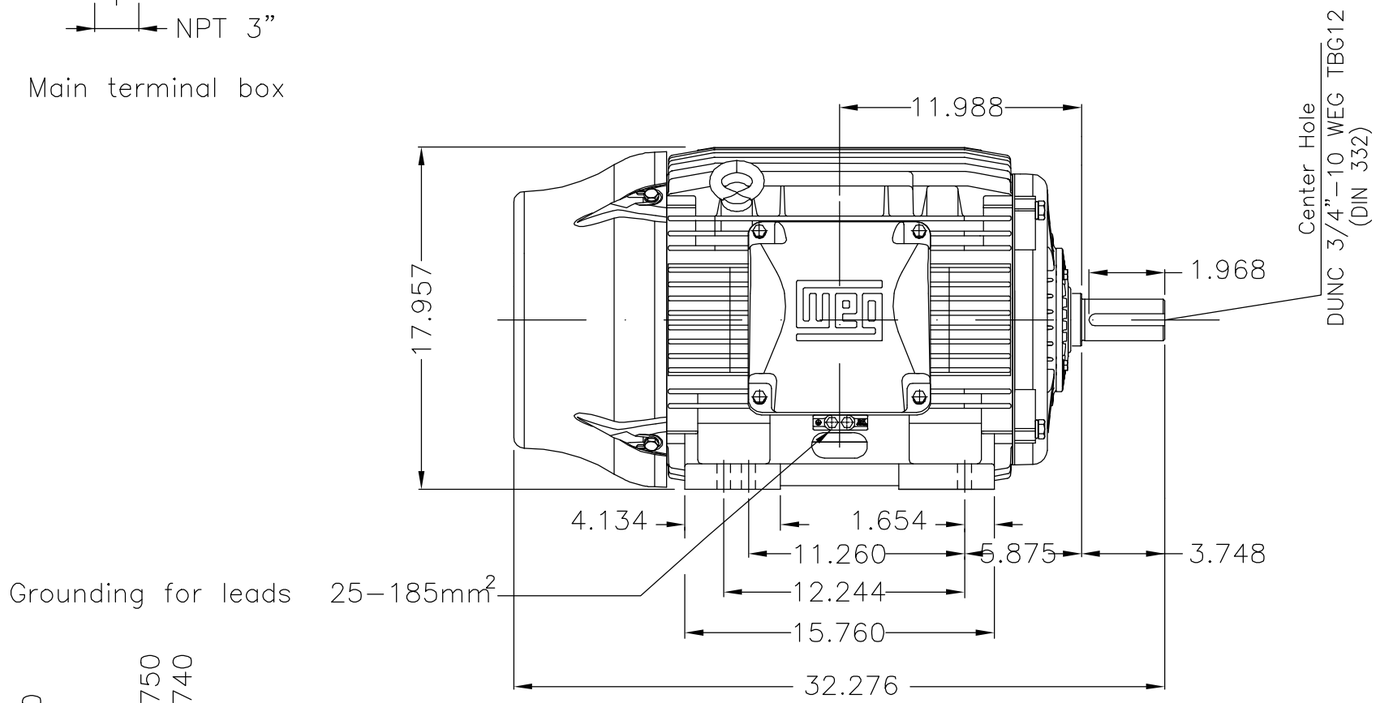

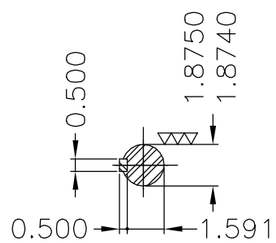

DE Shaft End

Kit porta escova de aterramento AEGIS SGR–82.1–3MFH / Brush holder kit AEGIS SGR–82.1–3MFH

Anel interno especial de fixação do rolamento dianteiro /
Special internal fastening bearing cap of DE bearing

Plano de pintura 203A / Painting plan 203A

Forma construtiva NEMA F–1 / Mounting NEMA F–1

Forma construtiva B3D / Mounting B3R(D)

WEG ELECTRIC CORPORATION – WEC

ECM	LOC	SUMMARY OF MODIFICATIONS	EXECUTED	CHECKED	RELEASED	DATE	VER
500001534976		ALT. CONFORME CLAIM 415113330	RBOECK	ALISSON	ALISSON	11.02.2019	04
500001293996		ATUALIZADO COTA H-H	AFILHO	MENSOR	MENSOR	10.04.2017	03

EXECUTED	SCARMAGNANI	THREE PHASE W22 MOTOR - NEMA PREMIUM EFF	10002805322
CHECKED	DAYANAR	FRAME 364/5TS IP55	000 / 04
RELEASED	DAYANAR		
REL DT	09.04.2014	WMO JARAGUA DO SUL ENGENHARIA DE PRODUTO	SHEET 1 / 1

75 HP	02 Poles	60Hz	413384814/0	MEC	B
60 HP	02 Poles	60Hz	413384813/0	MEC	A

UNCONTROLLED COPY

RELEASED

ZME A3

WEG's property. Forbidden reproduction without previous authorization.