No reproduction of this drawing is allowed written permission of WEG Motores

EIXO		
PADRÃO		Dimensões em polegadas
OPCIONAL		Dimensions in inches
ESPECIAL	X	

THIS IS AN UPDATED REVISION, THE PREVIOUS ONE MUST BE DISREGARDED.

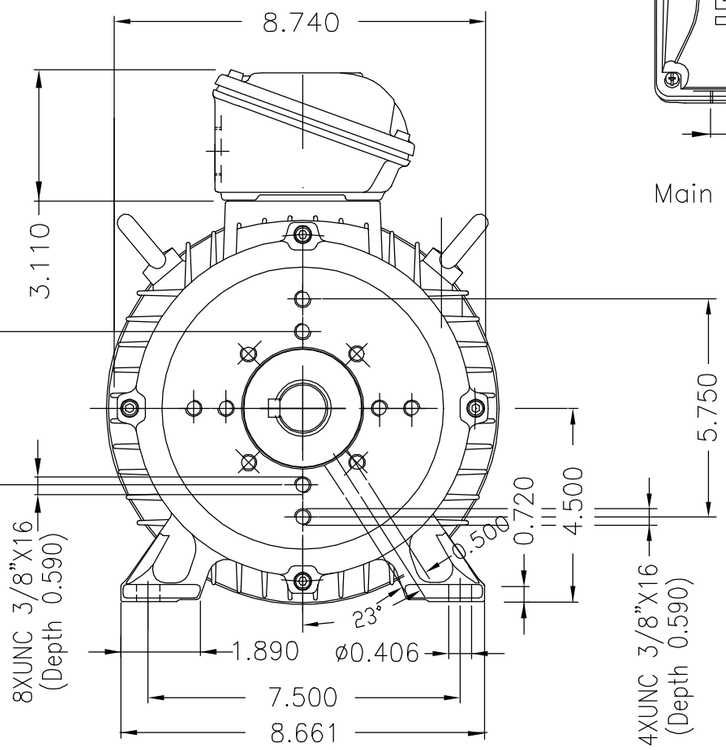

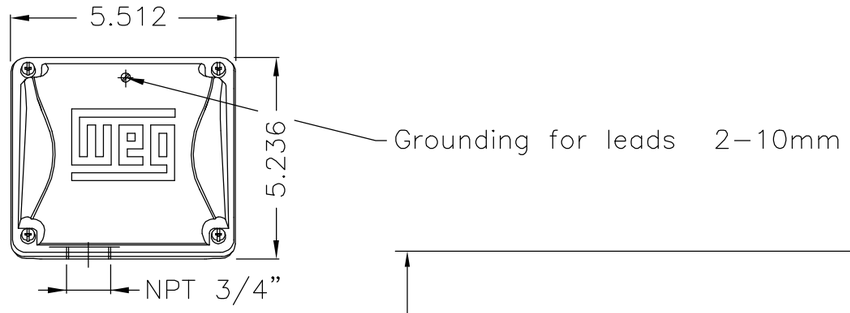

Main terminal box

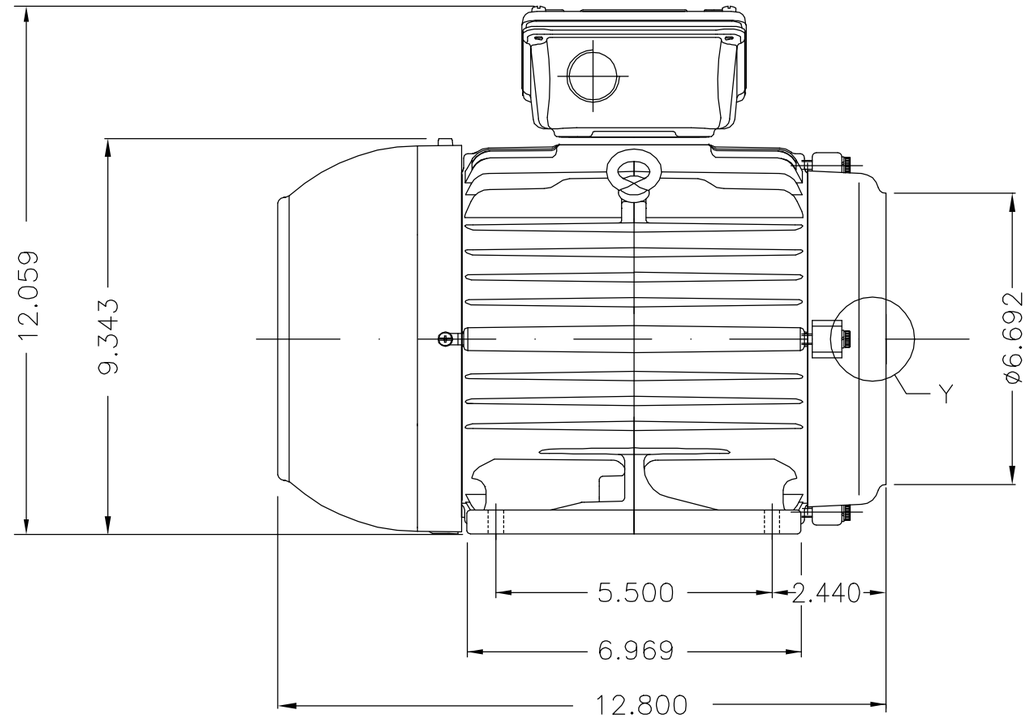

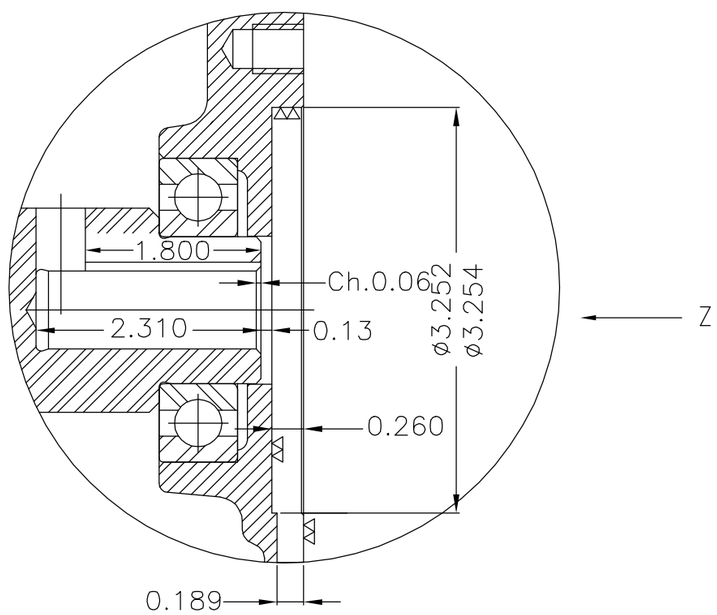

Detail Y

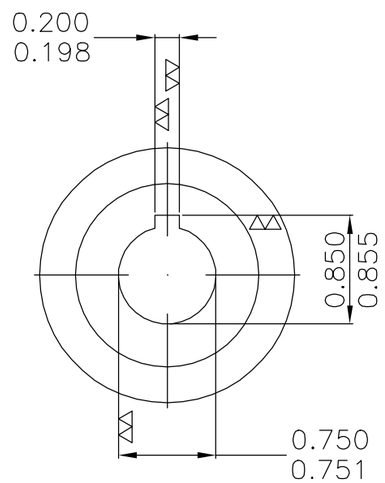

View Z

Categoria A / Design A

Motor com pacote deslocado, prensagem especial /
Stator and rotor core are displaced , special pressing

Tampa flangeada especial / Special flanged endshield

Plano de pintura 207A / Painting plan 207A

Forma construtiva B34T / Mounting B34T

WEG ELECTRIC CORPORATION – WEC

ECM	LOC	SUMMARY OF MODIFICATIONS	EXECUTED	CHECKED	RELEASED	DATE	VER
500001112370		ALTERADO CONF. CLAIM 414709376	RICLAV	ALISSON	ALISSON	23.01.2019	03
500001083079		ALT. CFM DETALHAMENTO	ADRIANAP	CLAUDEMIRR	CLAUDEMIRR	08.09.2015	02

EXECUTED	ADRIANAP	THREE PHASE HIGH EFFICIENCY MOTOR W22	10001661782
CHECKED	ADEMILSON		000 03
RELEASED	ADEMILSON		
REL DT	16.03.2012	WMO JARAGUA DO SUL ENGENHARIA DE PRODUTO	SHEET 1 /

5 HP 04 Poles 60Hz 412419063/0 ELET/MEC

A

UNCONTROLLED COPY

RELEASED

ZME A3

WEG's property. Forbidden reproduction without previous authorization.