No reproduction of this drawing is allowed written permission of WEG Motores

EIXO	
PADRÃO	
OPCIONAL	
ESPECIAL	X

TOLERÂNCIAS GERAIS
X ±2 .XX ±0.5
.X ±1 .XXX ±0.127
ANGULAR ±2°

CERTIFIED WEG MOTORES
Certified document. Not subject to changes.

THIS IS AN UPDATED REVISION, THE PREVIOUS ONE MUST BE DISREGARDED.

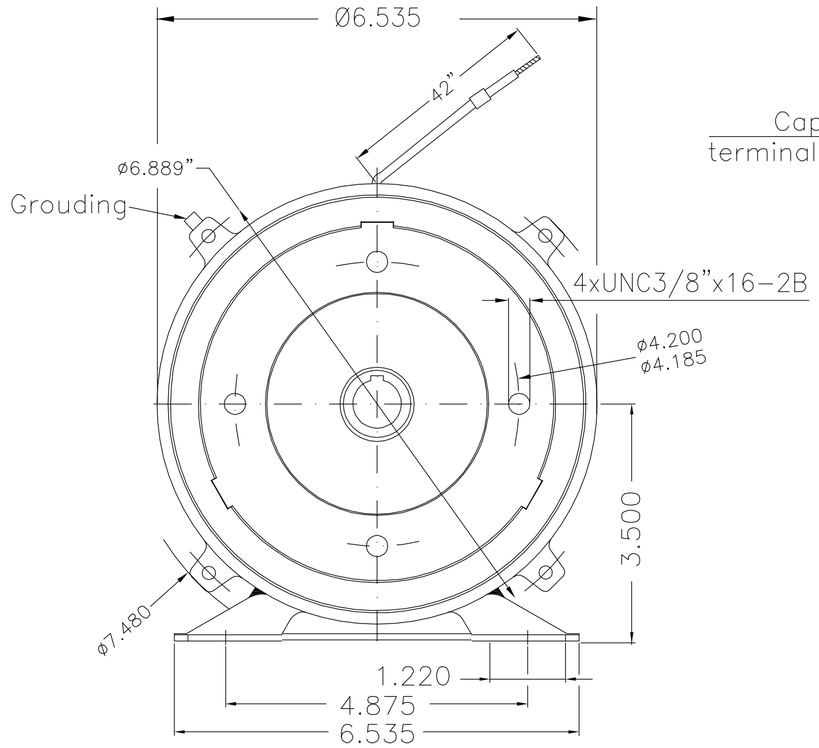

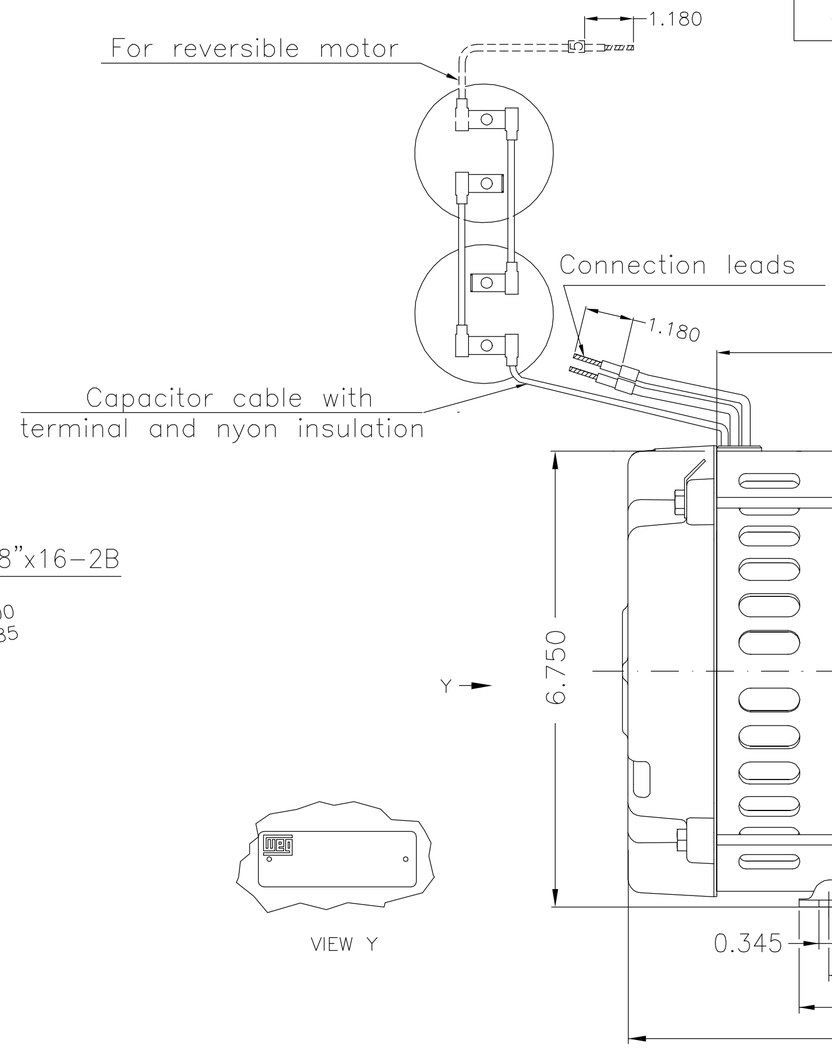

VIEW Y

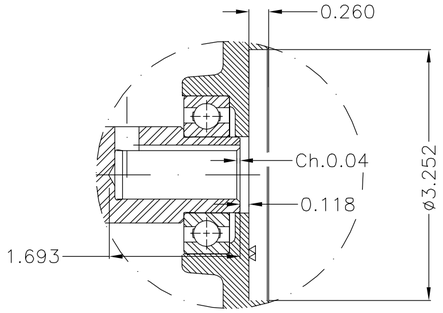

DETAIL Z

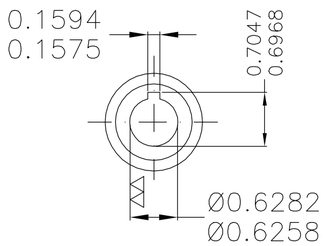

VIEW X

WIRING DIAGRAM FOR REVERSIBLE MOTOR

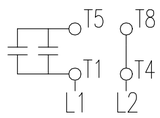

TO REVERSE ROTATION, INVERT T5 AND T8.

- Placa de identificação em aço inox / Stainless steel nameplate
- Temperatura máxima do óleo 40°C / Oil maximum temperature 40°C
- Comprimento dos cabos de ligação 42" / Connection leads with 42"
- Rotor sem aletas / Rotor without blades
- Reforçar o pé com 2 pontos de solda mig / Supplied with reinforced weld on foot
- Motor deve trabalhar submerso em óleo / Motor shall be fully submerged in oil
- Rolamento traseiro de esferas 6203 ZZ / 6203 ZZ NDE ball bearing
- Anel de borracha na saída dos cabos / Rubber bushing on leads outlet
- Rolamento dianteiro de esferas 6205 ZZ / DE ball bearing 6205 ZZ
- Tampa flangeada especial / Special flange
- Cabos Teflon com certificação UL / Teflon leads with UL certification
- Cabos de ligação numerados com etiqueta / Leads are labeled
- Retirar plástico protetor da placa de identificação / Remove protection film from nameplate
- Fornecido sem chaveta / Supplied without key
- Regime de serviço S3 / Duty S3
- Sem ventilador / Without fan
- Forma construtiva B34T / Mounting B34T

WEG ELECTRIC CORPORATION – WEC

ECM	LOC	SUMMARY OF MODIFICATIONS	EXECUTED	CHECKED	RELEASED	DATE	VER
500002000911		Alterado conf. ECM	PAULOJC	ARIVABENE	ARIVABENE	17.09.2021	13
500001857887		Alterado conforme ECM	PAULOJC	MODENESI	MODENESI	08.12.2020	12

EXECUTED	EDUARDOC1	SINGLE PHASE MOTOR	10002183389
CHECKED	VSCHEIDT	FRAME E56 IP21	000 / 13
RELEASED	VSCHEIDT		
REL DT	21.03.2013	W/MO LINHARES ENGENHARIA DO PRODUTO	SHEET 1 / 1

7.5 HP	04 Poles	60Hz	415454424	Cap. 2 x 45 μF/400 V – parallel connection	B
5 HP	04 Poles	60Hz	412758256	Cap. 2 x 45 μF/400 V – parallel connection	A

UNCONTROLLED COPY

RELEASED

ZME A2

WEG's property. Forbidden reproduction without previous authorization.