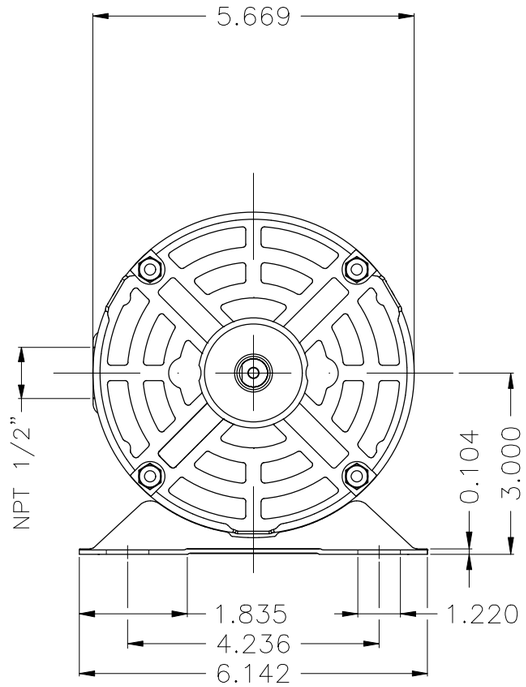

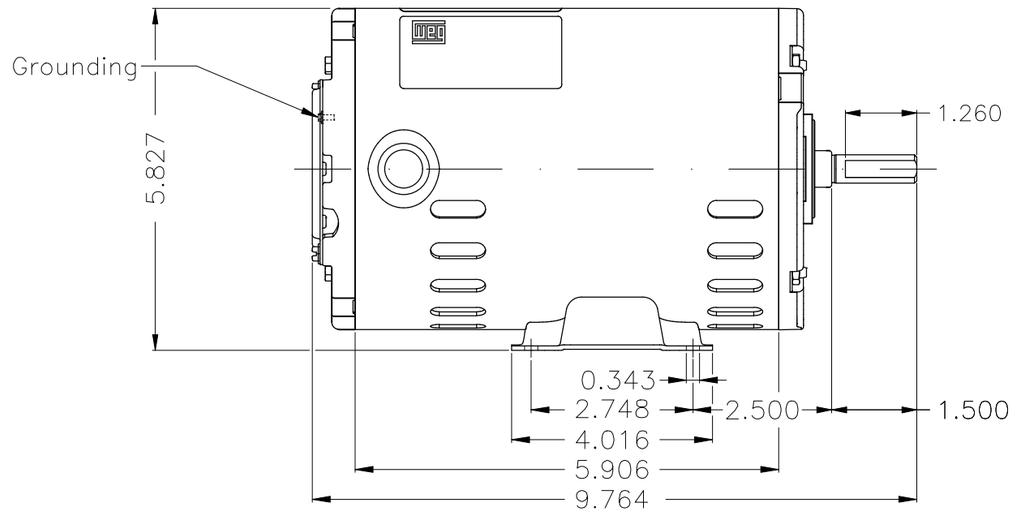

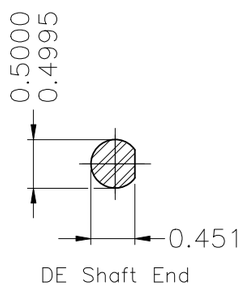

Phenolic thermal protector - automatic

Mounting F-1/B3R(D)

ECM	LOC	SUMMARY OF MODIFICATIONS	EXECUTED	CHECKED	RELEASED	DATE	VER
			HYBRISUSER				00

EXECUTED	HYBRISUSER	SINGLE PH. MOTOR ROLLED STEEL FAN AND EXHAUST	PREVIEW
CHECKED		FRAME 48 IP21 ODP	WDD 00
RELEASED			
REL. DATE		WMO Jaragua do Sul Product Engineering	SHEET 1 / 1

0.33 HP 04 Poles 60 Hz

A

Dimensions in inches

A3

XME

WEG's property. Forbidden reproduction without previous authorization.