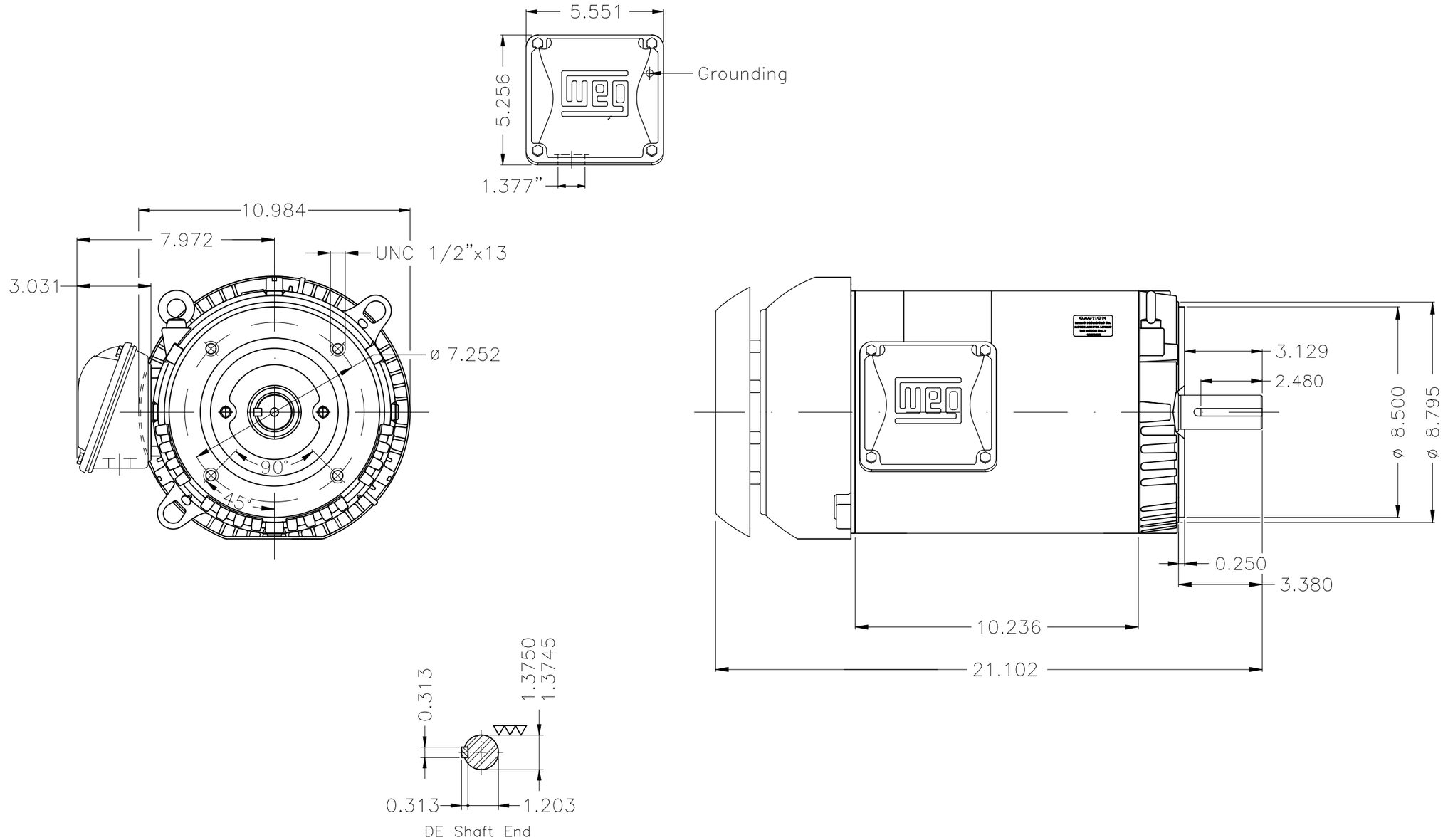

Dimensions in inches

Color Munsell N 1 matte black							
Painting plan 207N							
Mounting W-6/V18R(D)							
			HYBRISUSER				00
ECM	LOC	SUMMARY OF MODIFICATIONS	EXECUTED	CHECKED	RELEASED	DATE	VER

EXECUTED	HYBRISUSER	THREE PH. MOTOR ROLLED STEEL HIGH EFF.	PREVIEW
CHECKED		FRAME 213/5TC IP55 TEFC	WDD 00
RELEASED			
REL. DATE		WMO Jaragua do Sul Product Engineering	SHEET 1 / 1

3 HP 06 Poles 60 Hz

A

A3

XME

WEG's property. Forbidden reproduction without previous authorization.