EJE/SHAFT	
ESTÁNDAR/STANDARD	
OPCIONAL/OPTIONAL	
ESPECIAL/SPECIAL	X

Dimensões em polegada
Dimensions in inches

PRELIMINARY DOCUMENT
Not to be used for installation purposes.

THIS IS AN UPDATED REVISION, THE PREVIOUS ONE MUST BE DISREGARDED.

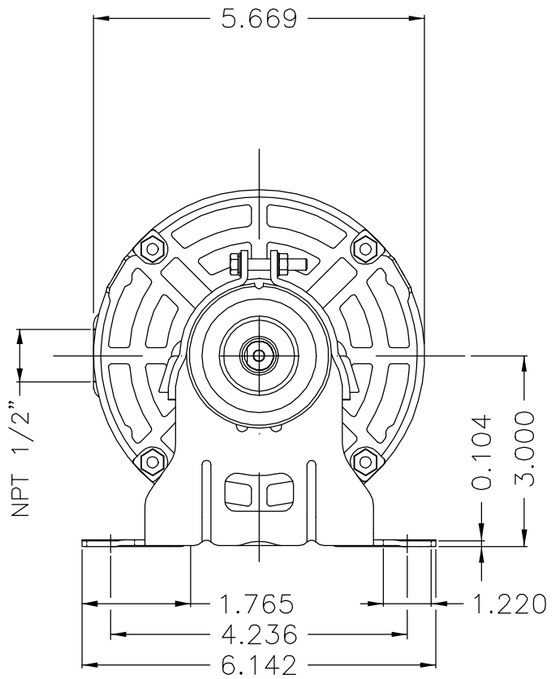

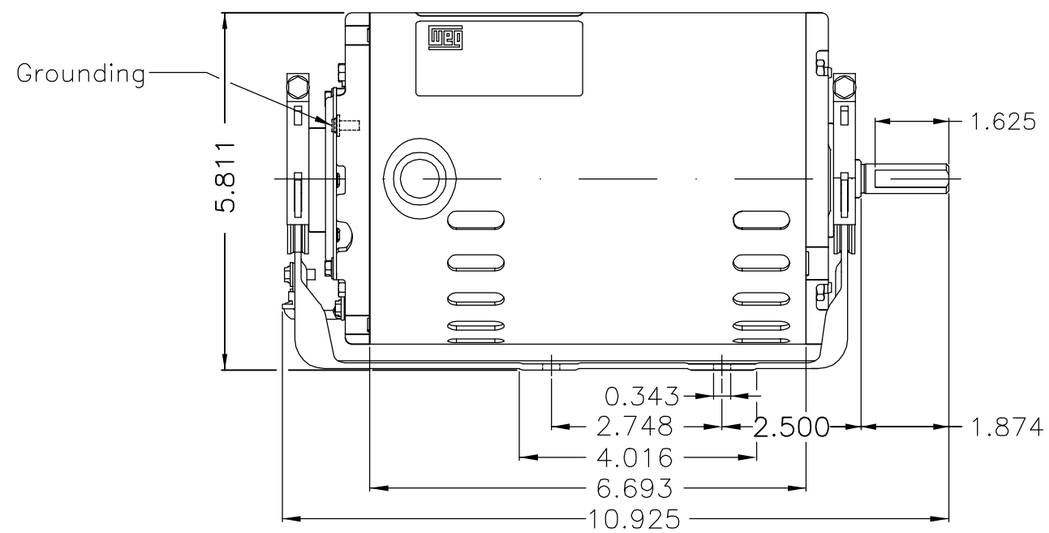

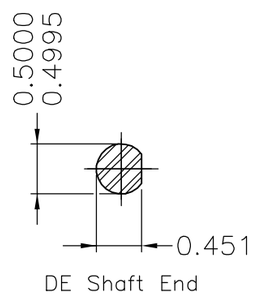

Forma constructiva F-1/B3R(D) / Mounting F-1/B3R(D)

WEG ELECTRIC CORPORATION - WEC

OV: 4852547

ECM	LOC	SUMMARY OF MODIFICATIONS	EXECUTED	CHECKED	RELEASED	DATE	VER
500001454953		NEW DOCUMENT	CESTRELLA	CMARQUEZ	CMARQUEZ	22.05.2018	00

EXECUTED	CESTRELLA	SINGLE PHASE MOTOR OPEN ROLLED STEEL FRAME 48Z ODP
CHECKED	CMARQUEZ	
RELEASED	CMARQUEZ	
REL DT	22.05.2018	WMX Huehuetoca Product Engineering

10005772866
000 | 00
SHEET 01 / 01

0.5 HP 04 Poles 60Hz 415067295

A

UNCONTROLLED COPY

RELEASED

ZME A3

WEG's property. Forbidden reproduction without previous authorization.