EIXO/SHAFT	
PADRÃO/STANDARD	X
OPCIONAL/OPTIONAL	
ESPECIAL/SPECIAL	

Dimensões em polegada
Dimensions in inches

CERTIFIED
WEG MOTORES
Certified document.
Not subject to changes.

THIS IS AN UPDATED REVISION, THE PREVIOUS ONE MUST BE DISREGARDED.

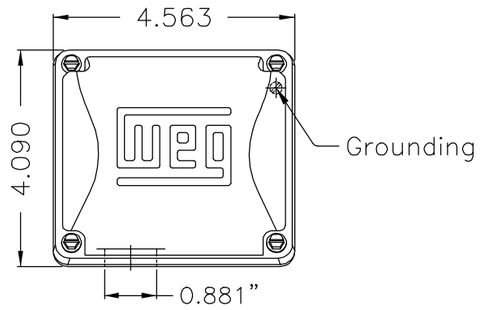

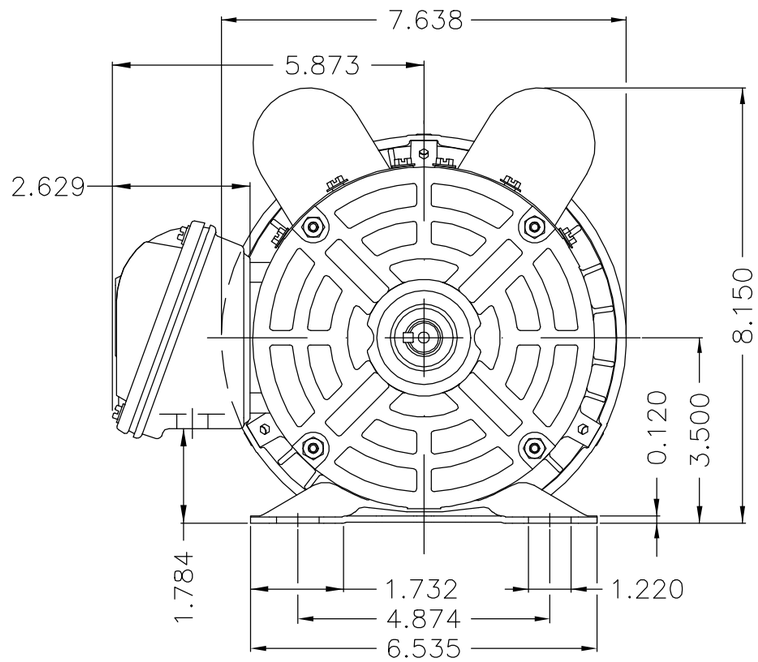

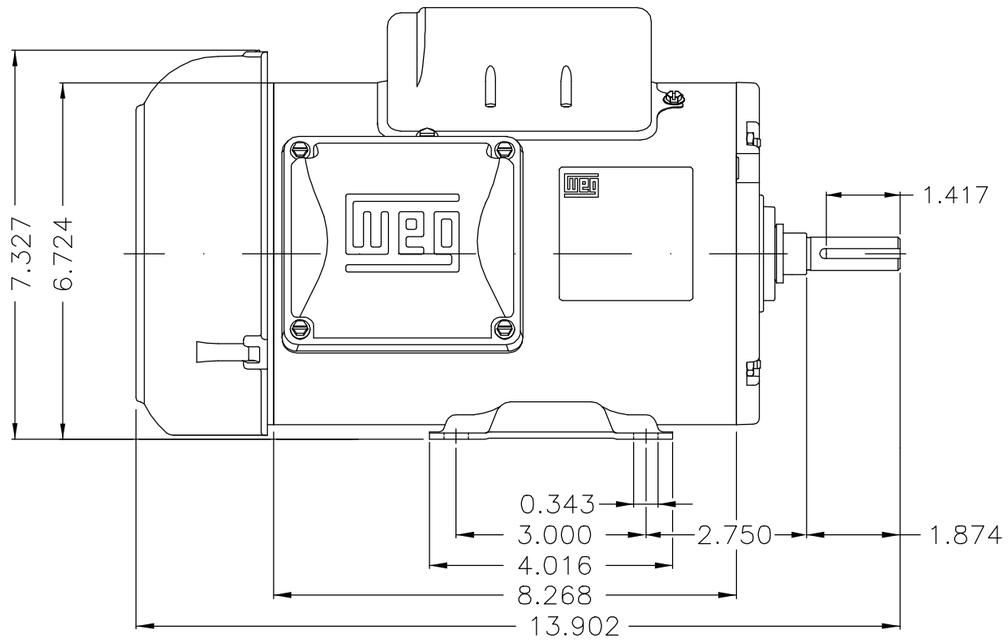

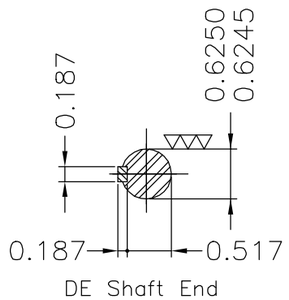

Protetor térmico fenólico – manual / Phenolic thermal protector – manual
Forma construtiva B3D / Mounting F-1/B3R(D)

WEG ELECTRIC CORPORATION - WEC

ECM	LOC	SUMMARY OF MODIFICATIONS	EXECUTED	CHECKED	RELEASED	DATE	VER
500001884523		Alterado conforme ZM 415176978	DEYKSON	SANDRIN	SANDRIN	08.02.2021	02
500001171755		ADICIONADO CARIMBO DE CERTIFICADO	LUCASSZ	PATRICKL	PATRICKL	02.05.2016	01

EXECUTED	LUCASSZ	SINGLE PHASE MOTOR TEFC ROLLED STEEL	10004254304
CHECKED	PATRICKL	FRAME 56 IP55 TEFC	000 / 02
RELEASED	PATRICKL		
REL DT	02.05.2016	WMO LINHARES ENGENHARIA DO PRODUTO	SHEET 1 / 1

1.5 HP 02 Poles 60Hz 414268472 A

UNCONTROLLED COPY
RELEASED
ZME A3

WEG's property. Forbidden reproduction without previous authorization.