EIXO	
PADRÃO	X
OPCIONAL	
ESPECIAL	

CERTIFIED
WEG MOTORES
Certified document.
Not subject to changes.

ESTA REVISÃO SUBSTITUI E CANCELA A ANTERIOR, A QUAL DEVERA SER ELIMINADA.

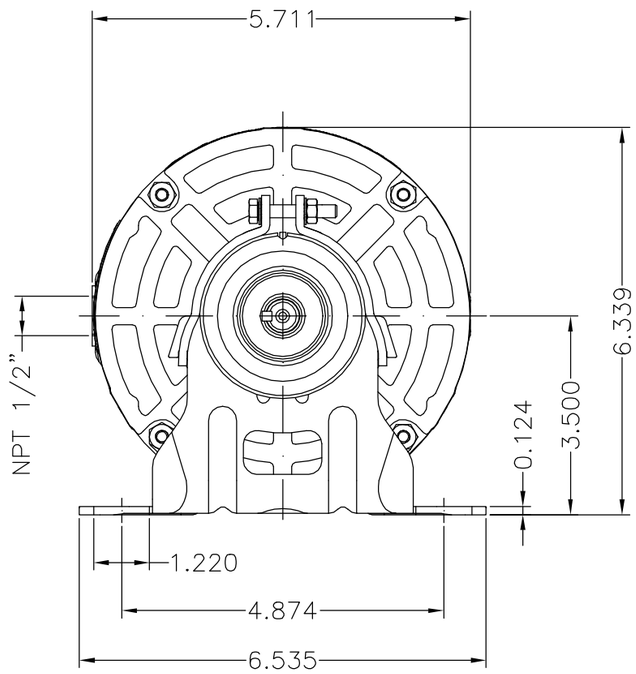

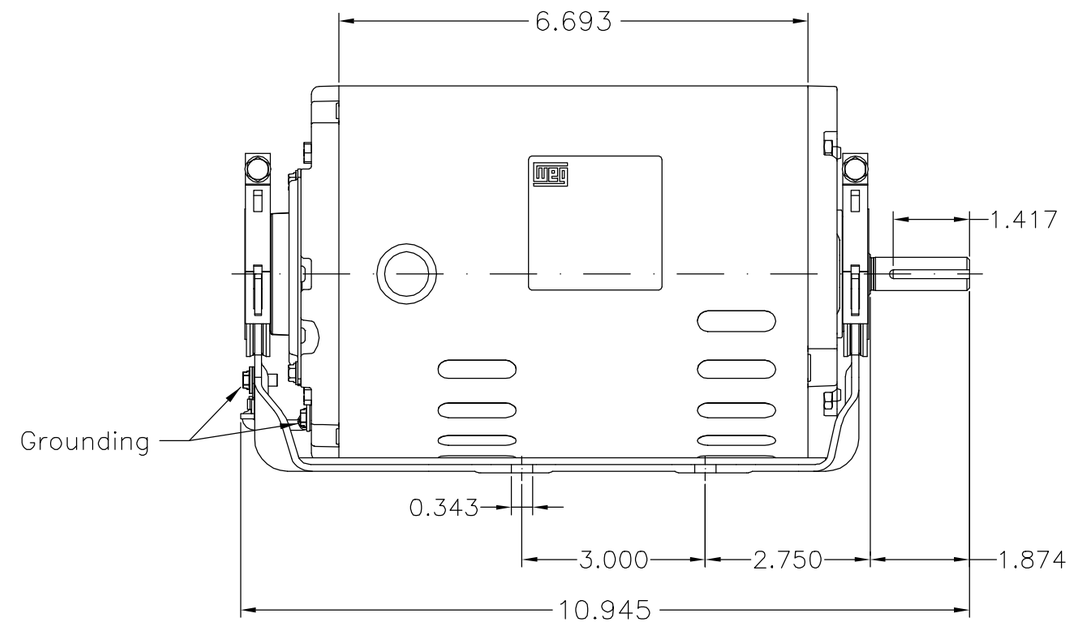

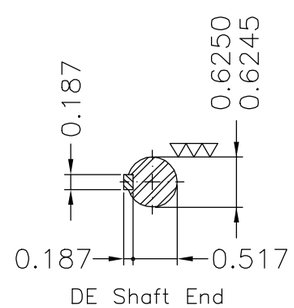

Forma construtiva B3D / Mounting B3R(D)

Sem pintura / Not painted

Protetor térmico fenólico – automático / Phenolic thermal protector – automatic

WEG ELECTRIC CORPORATION - WEC

ECM	LOC	SUMMARY OF MODIFICATIONS	EXECUTED	CHECKED	RELEASED	DATE	VER
500001884523		Alterado conforme ZM 415176978	DEYKSON	SANDRIN	SANDRIN	08.02.2021	03
500001307299		ALTERADO CONFORME ECM	WILLIAMSM	TOBIASR	TOBIASR	10.05.2017	02

EXECUTED	LUCASSZ	SINGLE PHASE MOTOR	10004115470
CHECKED	VICTORCM	FRAME W56 IP21	000 03
RELEASED	VICTORCM		
REL DT	04.03.2016	WMO LINHARES ENGENHARIA DO PRODUTO	SHEET 1 / 1

0.5 HP 04 Poles 60Hz 414200919/414198513

A

UNCONTROLLED COPY

RELEASED

ZME A3

WEG's property. Forbidden reproduction without previous authorization.