EIXO/SHAFT	
PADRÃO/STANDARD	
OPCIONAL/OPTIONAL	
ESPECIAL/SPECIAL	X

THIS IS AN UPDATED REVISION, THE PREVIOUS ONE MUST BE DISREGARDED.

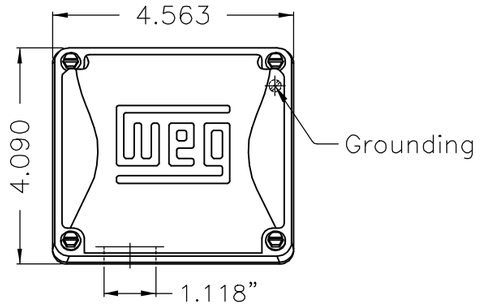

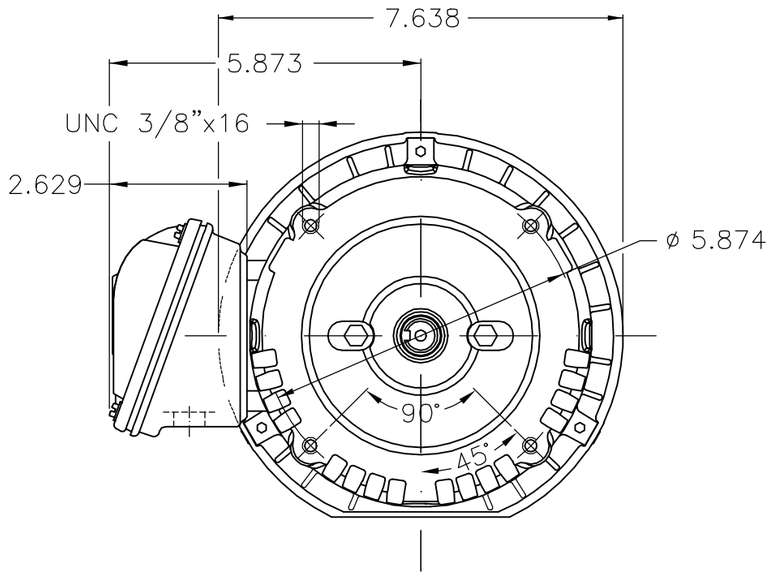

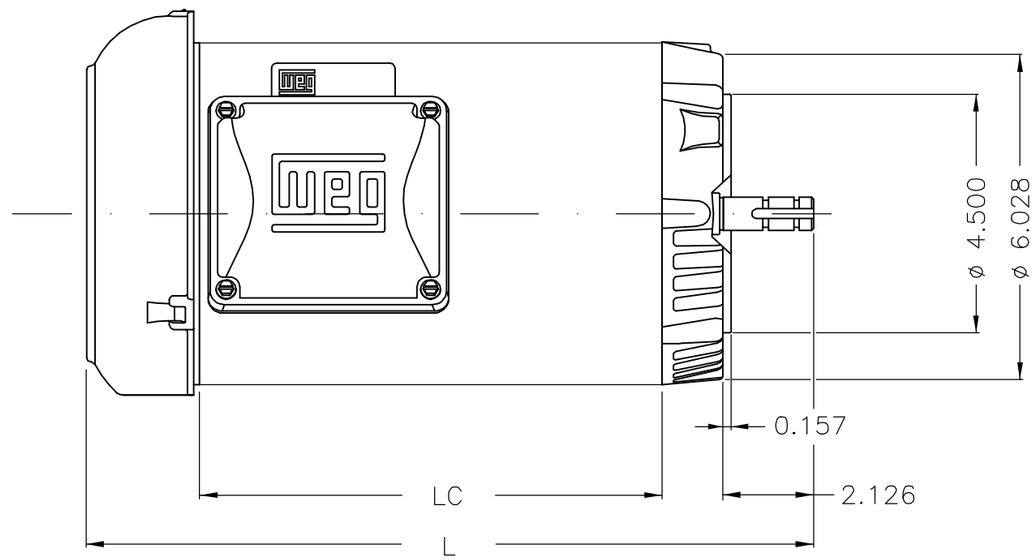

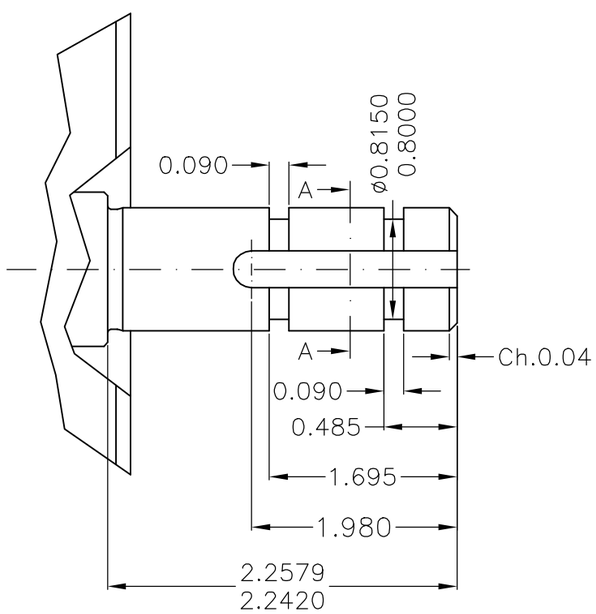

DE Shaft End

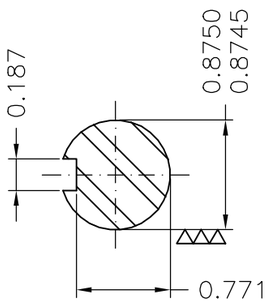

Section A–A

				LC	L	
2 HP	04 Poles	60Hz	414159226	8.268	13.976	B
1.5 HP	04 Poles	60Hz	415840830	8.268	13.976	A

Fornecido sem chaveta / Supplied without key

Forma construtiva B14D / Mounting F-1/B14R(D)

WEG ELECTRIC CORP.

ECM	LOC	SUMMARY OF MODIFICATIONS	EXECUTED	CHECKED	RELEASED	DATE	VER
500001691520		Alterado conforme ECM	MODENESI	LGAMA	LGAMA	02.12.2019	02
500001136582			PATRICKL	LUCASSZ	LUCASSZ	01.02.2016	01

EXECUTED	PATRICKL	THREE P. MOTOR TEFC ROLLED STEEL NEMA P.	10004050469
CHECKED	VICTORCM	FRAME 143/5TCZ IP55	000 02
RELEASED	VICTORCM		
REL DT	29.01.2016	WMO Linhares Product Engineering	SHEET 1 / 1

UNCONTROLLED COPY

RELEASED

ZME A3

WEG's property. Forbidden reproduction without previous authorization.