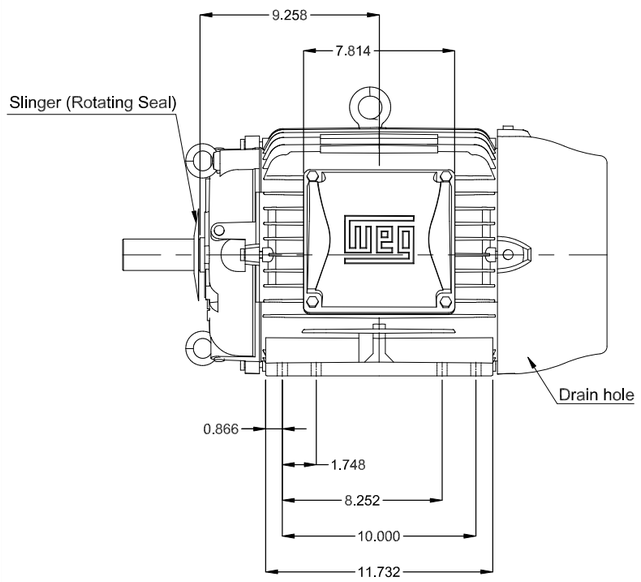

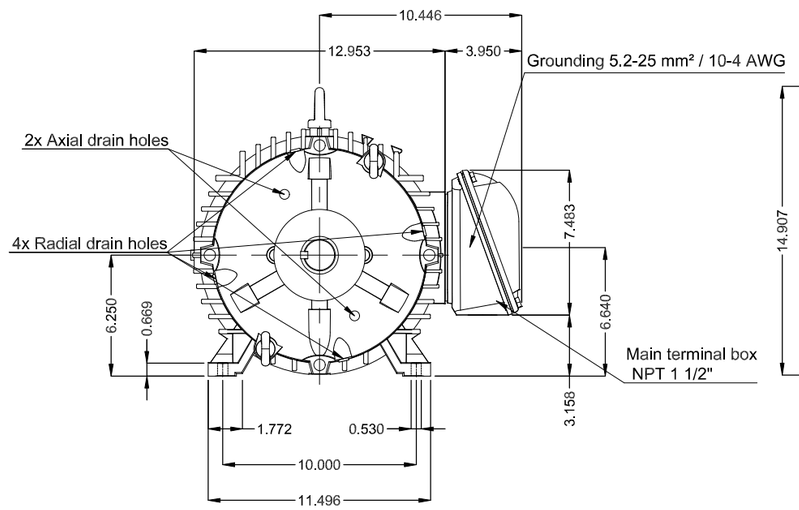

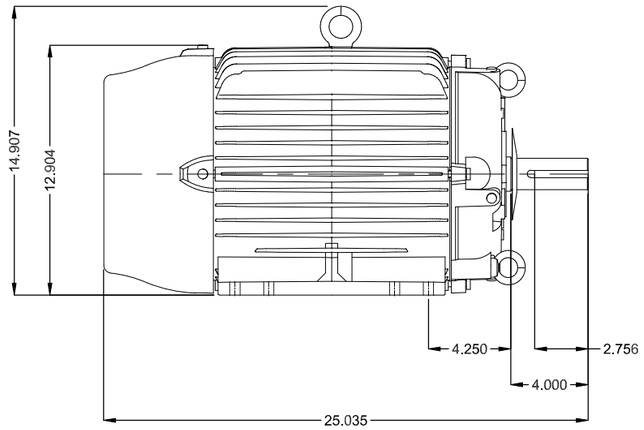

Without vertical jackscrews
Color RAL 5009
Painting plan 222E
Mounting NEMA F-2
Mounting B3L(E)

DE Shaft End

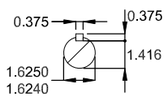

1.25/5.0 HP 12/06 Poles 60 Hz | A

ECM	LOC	SUMMARY OF MODIFICATIONS	EXECUTED	CHECKED	RELEASED	DATE	VER
			HYBRISUSER				00

EXECUTED	HYBRISUSER	THREE PH. MOTOR COOLING TOWER W22 HIGH EFF.
CHECKED		FRAME 254/6T IP55 TEFC
RELEASED		
REL. DATE		

PREVIEW
WDD 00
SHEET /

Dimensions in inches

A3

WEG's property. Forbidden reproduction without previous authorization.