EIXO/SHAFT	
PADRÃO/STANDARD	X
OPCIONAL/OPTIONAL	
ESPECIAL/SPECIAL	

Dimensões em polegada
Dimensions in inches

CERTIFIED WEG MOTORES
Certified document.
Not subject to changes.

THIS IS AN UPDATED REVISION, THE PREVIOUS ONE MUST BE DISREGARDED.

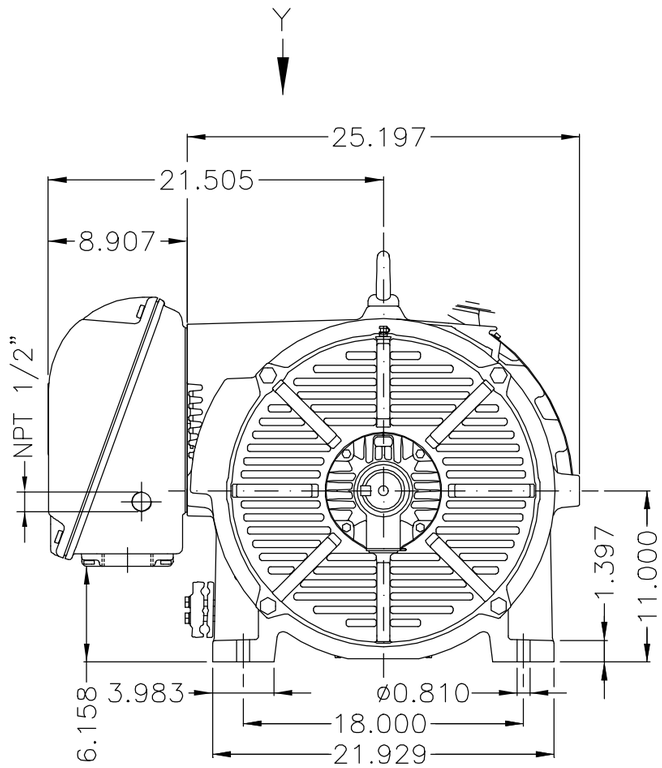

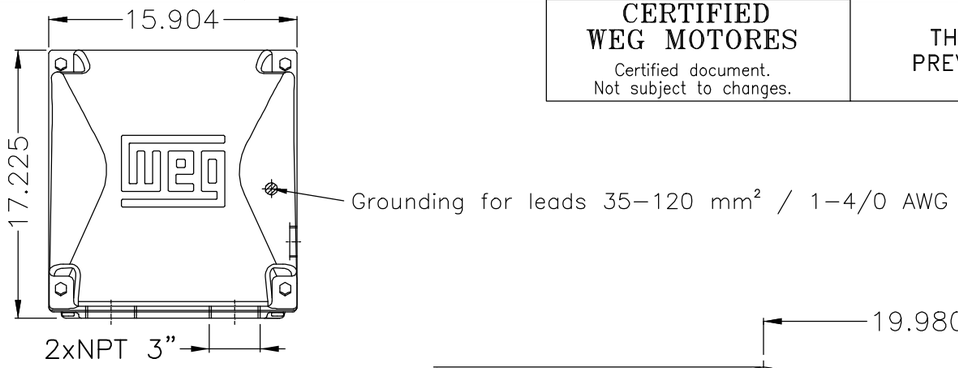

Main terminal box

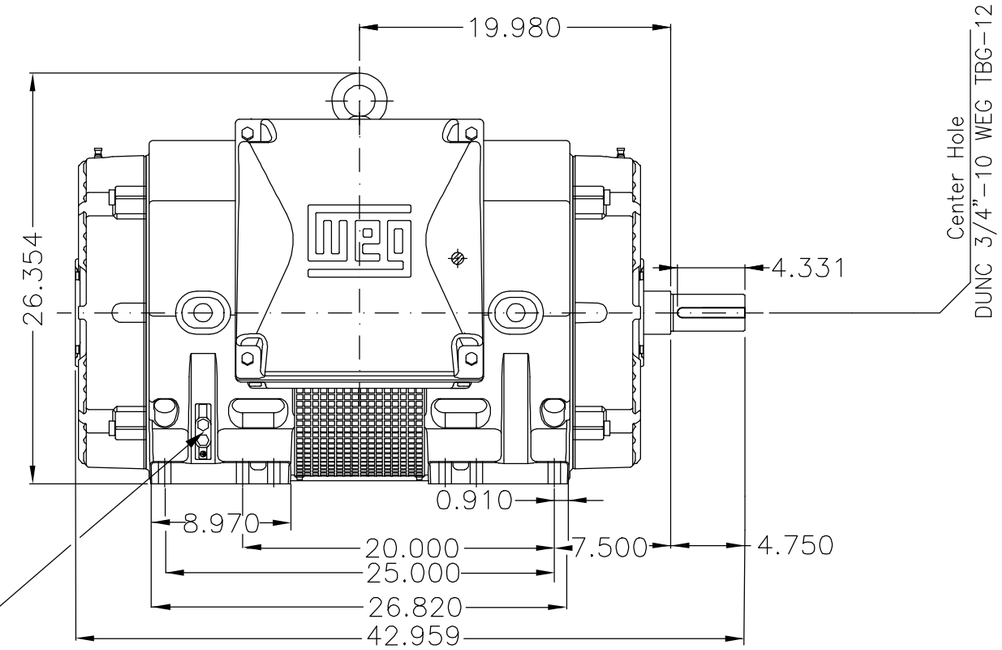

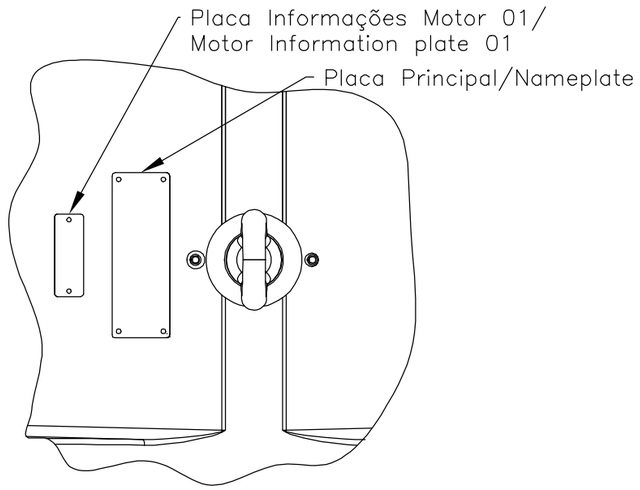

View Y

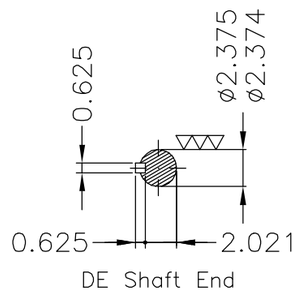

DE Shaft End

Mancal/ Bearing	Quant.graxa(g)/ Quantity grease(g)
Rolamento dianteiro/ DE bearing	10
Rolamento traseiro/ NDE bearing	10

Tampa traseira com mancal eletricamente isolado
NDE endshield with electrically insulated bearing hub

Intervalo de relubrificação dos rolamentos 1200 horas / Bearings relubrication interval 1200h

Resistência de aquecimento 110–127 V / 200–240 V / Space heaters 110–127 V / 200–240 V

Cor RAL 5009 / Color RAL 5009

Plano de pintura 203A / Painting plan 203A

Forma construtiva NEMA F–1 / Mounting NEMA F–1

Forma construtiva B3D / Mounting B3R(D)

WEG ELECTRIC CORPORATION - WEC

ECM	LOC	SUMMARY OF MODIFICATIONS	EXECUTED	CHECKED	RELEASED	DATE	VER
					SCALE		
500001549643		ALTERADO CONFORME CLAIM 415219992	RICLAV	DALTONR	DALTONR	06.03.2019	04
500001432232		ALT. CONFORME CLAIM 414999665	FRANCINES	CLEBERP	CLEBERP	22.03.2018	03

EXECUTED	NSCHMIDT	THREE PHASE W40 MOTOR NEMA PREMIUM EFF	10004198534
CHECKED	JOAOVICTOR	FRAME 447/9TS IP23 ODP	000 04
RELEASED	JOAOVICTOR		
REL DT	04.04.2016	WMO Jaragua do Sul Product Engineering	SHEET 1 /

600 HP 02 Poles 60Hz 414235710/0–MEC.

A

UNCONTROLLED COPY

RELEASED

ZME A3

WEG's property. Forbidden reproduction without previous authorization.