EIXO/SHAFT	
PADRÃO/STANDARD	X
OPCIONAL/OPTIONAL	
ESPECIAL/SPECIAL	

Dimensões em polegada
Dimensions in inches

CERTIFIED WEG MOTORES
Certified document.
Not subject to changes.

THIS IS AN UPDATED REVISION, THE PREVIOUS ONE MUST BE DISREGARDED.

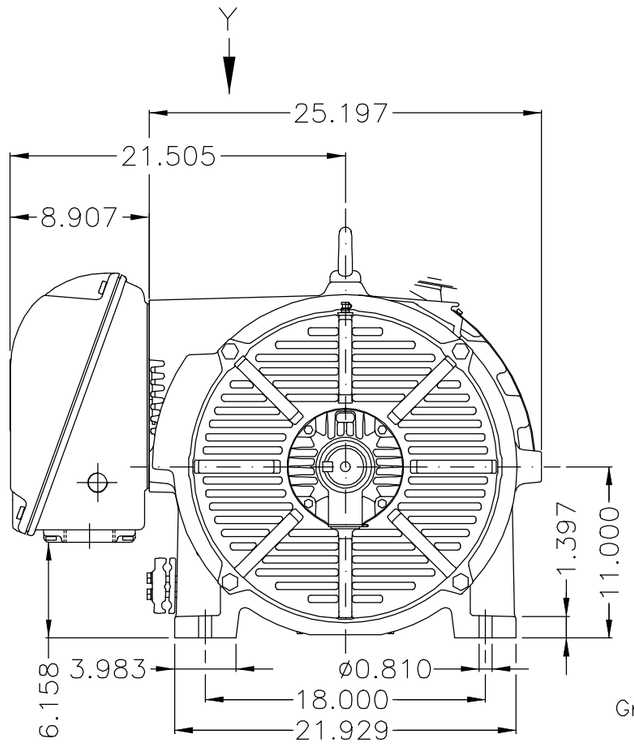

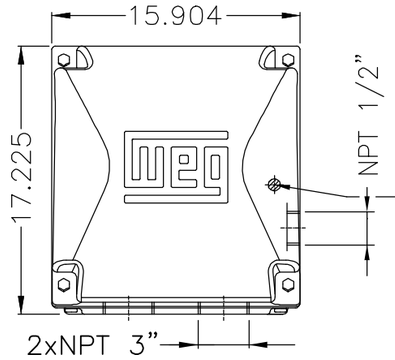

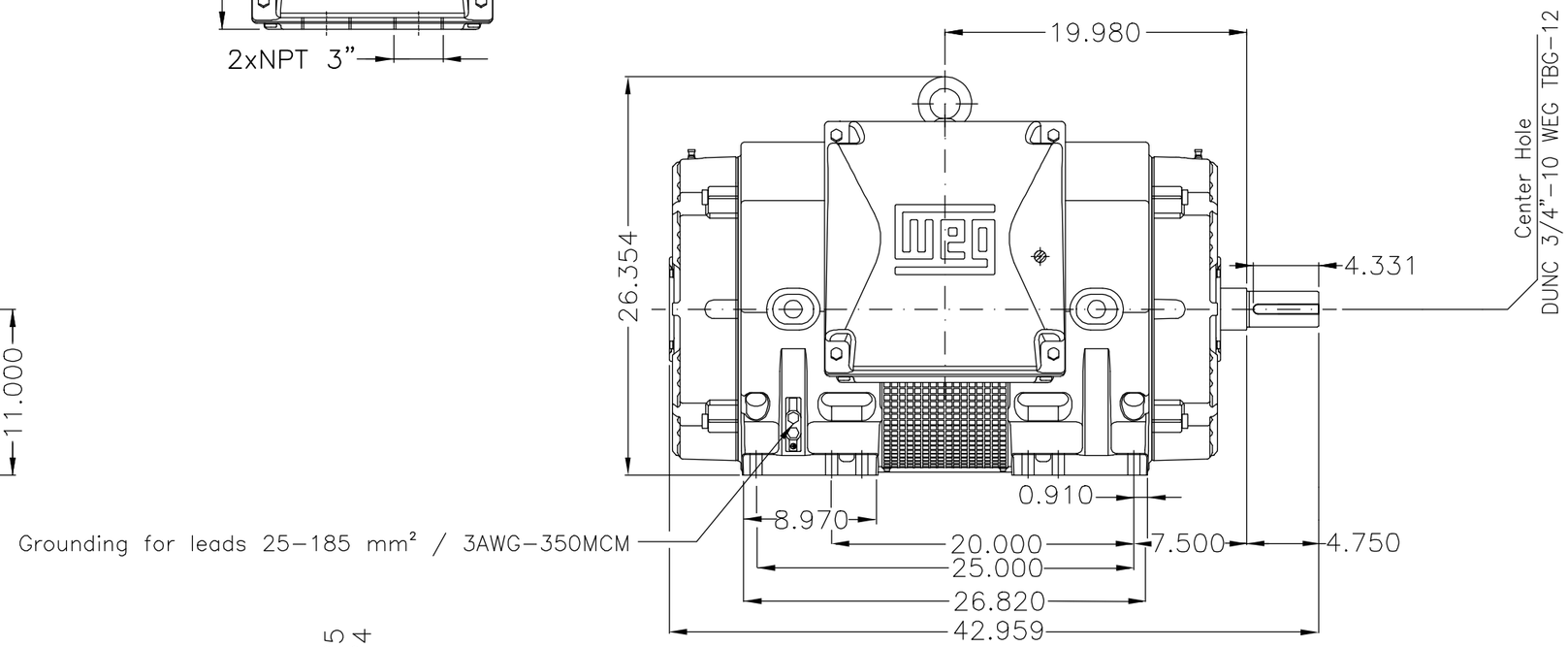

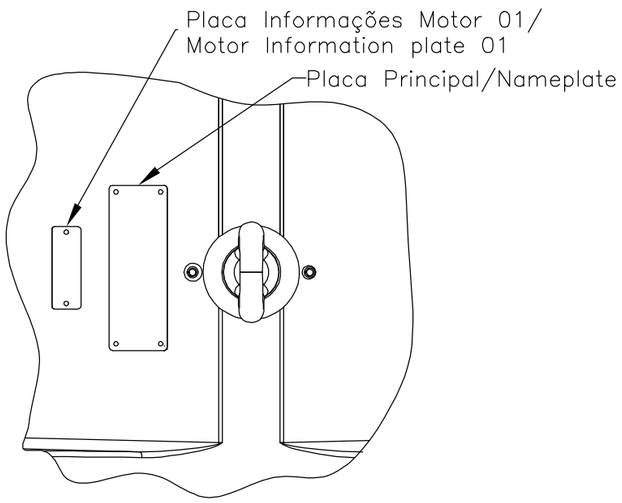

View Y

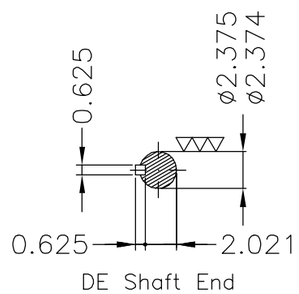

DE Shaft End

Mancal/ Bearing	Quant.graxa(g)/ Quantity grease(g)
Rolamento dianteiro/ DE bearing	10
Rolamento traseiro/ NDE bearing	10

Tampa traseira com mancal eletricamente isolado
NDE endshield with electrically insulated bearing hub
Intervalo de relubrificação dos rolamentos 1200 horas / Bearings relubrication interval 1200h
Resistência de aquecimento 110–127 V / 200–240 V / Space heaters 110–127 V / 200–240 V
Cor RAL 5009 / Color RAL 5009
Plano de pintura 203A / Painting plan 203A
Forma construtiva NEMA F–1 / Mounting NEMA F–1
Forma construtiva B3D / Mounting B3R(D)

MEC/ELET–412220247

WEG ELECTRIC CORPORATION - WEC

ECM	LOC	SUMMARY OF MODIFICATIONS	EXECUTED	CHECKED	RELEASED	DATE	VER
500001549643		ALTERADO CONFORME CLAIM 415219992	RICLAV	DALTONR	DALTONR	06.03.2019	05
500001432232		ALT. CONFORME CLAIM 414999665	FRANCINES	CLEBERP	CLEBERP	22.03.2018	04

SCALE

500 HP	02 Poles	60Hz	C
350 HP	02 Poles	60Hz	B
400 HP	02 Poles	60Hz 414294925/0	A

EXECUTED	DVEGINI
CHECKED	NSCHMIDT
RELEASED	NSCHMIDT
REL DT	24.05.2016

THREE PHASE W40 MOTOR NEMA PREMIUM EFF
FRAME 447/9TS IP23 ODP

WMO Jaragua do Sul Product Engineering

10004299679
000 05
SHEET 1 /

UNCONTROLLED COPY
RELEASED
ZME A3

WEG's property. Forbidden reproduction without previous authorization.