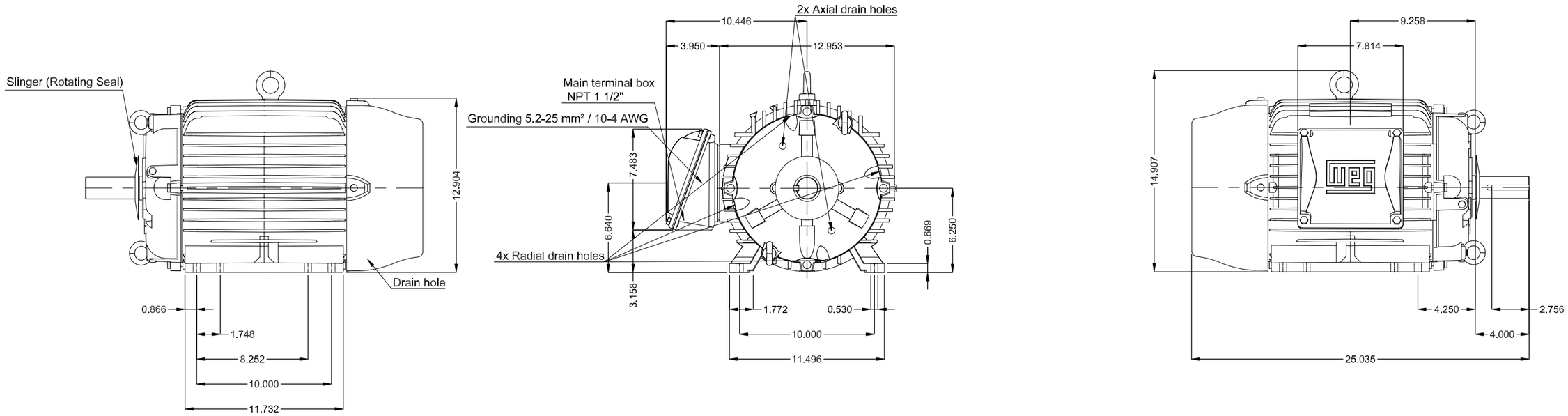


Without vertical jackscrews
Color RAL 5009
Painting plan 222E
Mounting NEMA F-1
Mounting B3R(D)

DE Shaft End

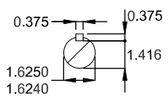


1.25/5.0 HP 12/06 Poles 60 Hz | A

| ECM | LOC | SUMMARY OF MODIFICATIONS | EXECUTED | CHECKED | RELEASED | DATE | VER |
|---|---|---|---|---|---|---|---|
| | | | HYBRISUSER | | | | 00 |

| | | |
|---|---|---|
| EXECUTED | HYBRISUSER | THREE PH. MOTOR COOLING TOWER W22 HIGH EFF. |
| CHECKED | | FRAME 254/6T IP55 TEFC |
| RELEASED | | |
| REL. DATE | | |

PREVIEW
WDD 00
SHEET /

Dimensions in inches

A3

WEG's property. Forbidden reproduction without previous authorization.