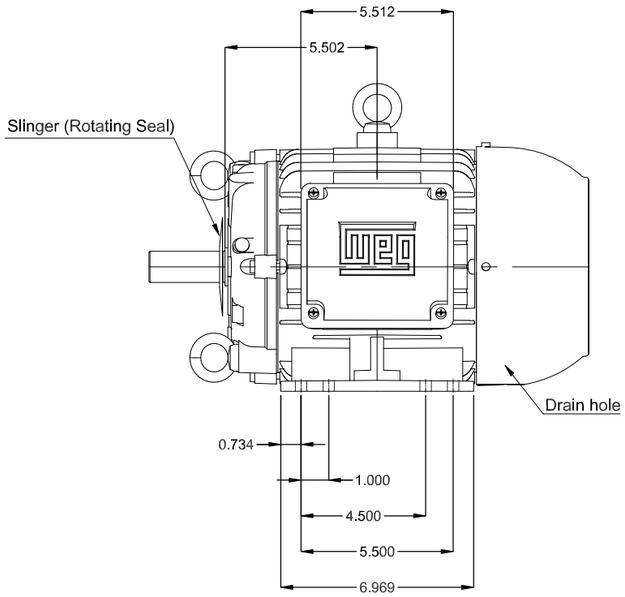

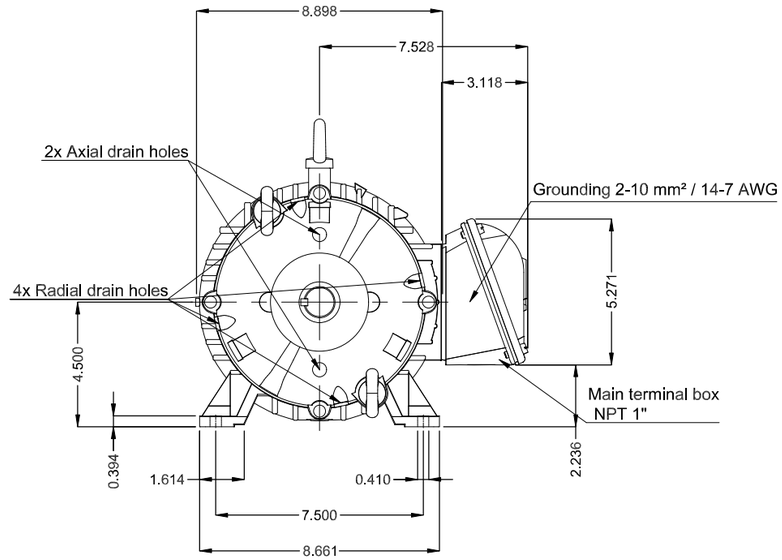

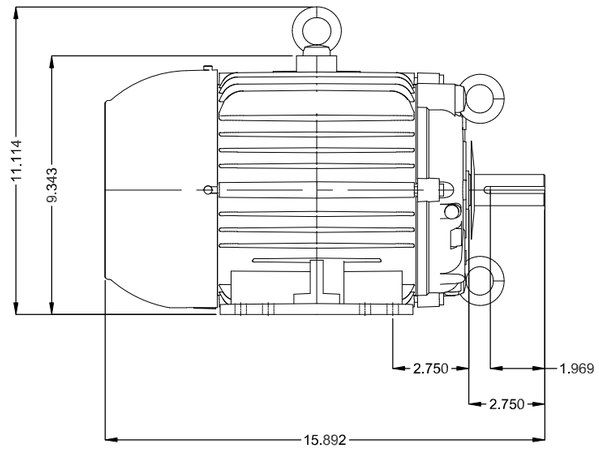

DE Shaft End

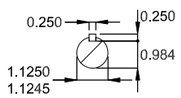

Color RAL 5009

Painting plan 202E

Mounting NEMA F-2

Mounting B3L(E)

5 HP 04 Poles 60 Hz | A

ECM	LOC	SUMMARY OF MODIFICATIONS	EXECUTED	CHECKED	RELEASED	DATE	VER
			HYBRISUSER				00

EXECUTED	HYBRISUSER
CHECKED	
RELEASED	
REL. DATE	

THREE PH. MOTOR COOLING TOWER W22 NEMA PREM. EFF.
FRAME 182/4T IP55 TEFC

PREVIEW

WDD 00

SHEET /

Dimensions in inches

A3

WEG's property. Forbidden reproduction without previous authorization.