EJE/SHAFT	
ESTÁNDAR/STANDARD	X
OPCIONAL/OPTIONAL	
ESPECIAL/SPECIAL	

Dimensões em polegada
Dimensions in inches

PRELIMINARY DOCUMENT
Not to be used for installation purposes.

THIS IS AN UPDATED REVISION, THE PREVIOUS ONE MUST BE DISREGARDED.

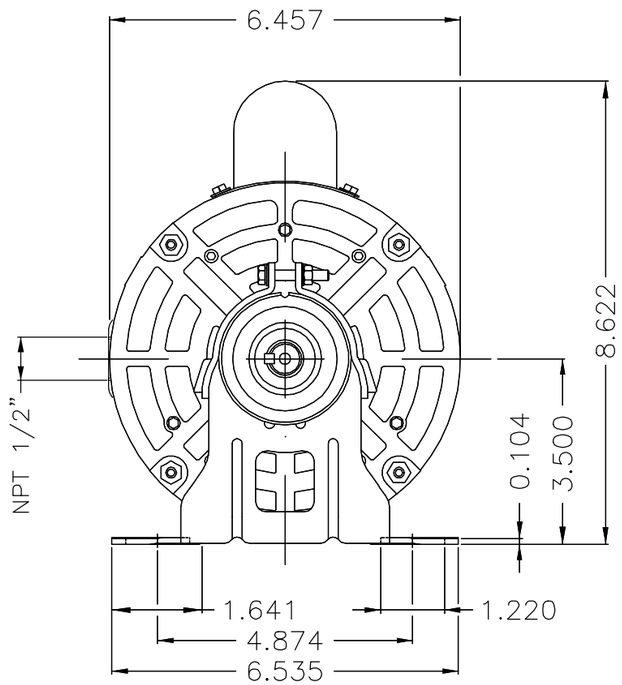

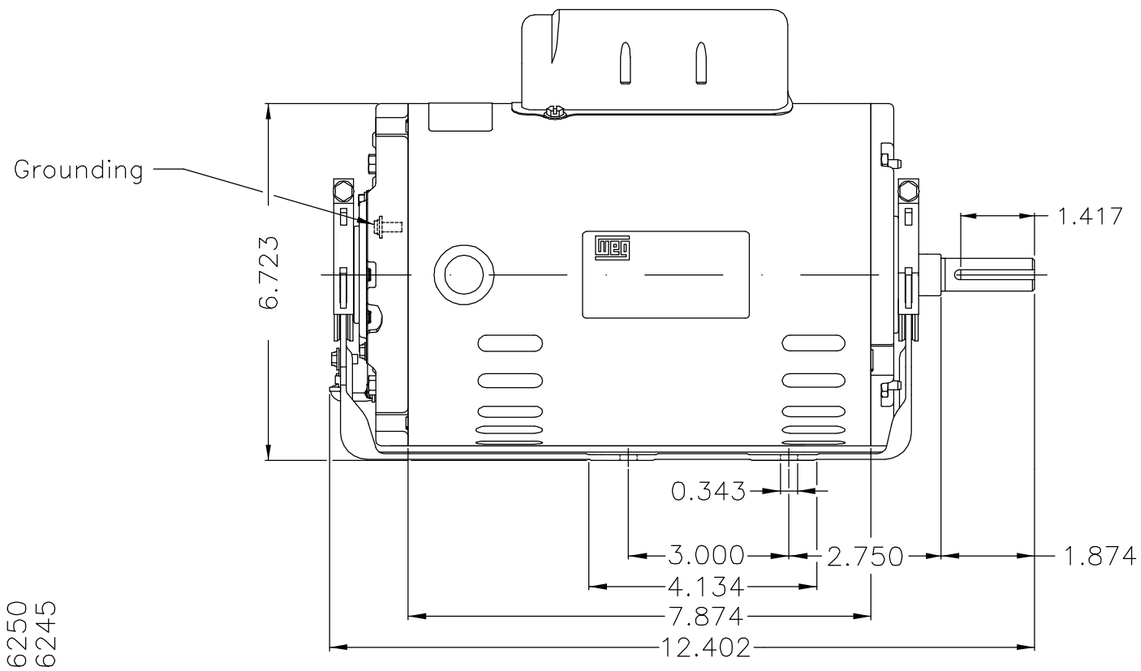

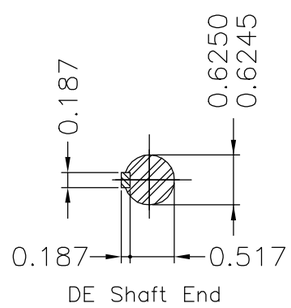

Aislamiento Clase F (DT=B) / Class F (DT=B) insulation
Solamente fondo / Primer Only
Protector térmico fenólico – Automático / Phenolic thermal protector – automatic
Ambos sentidos de rotacion / Rotation CW and CCW
Sin pintura / Without coating
Forma constructiva F-1/B3R(D) / Mounting F-1/B3R(D)

WEG ELECTRIC CORPORATION - WEC

OV: 50005522

ECM	LOC	SUMMARY OF MODIFICATIONS	EXECUTED	CHECKED	RELEASED	DATE	VER
500001747649		ACCORDING TO CLAIM 417261804	ESQUIVEL	CESTRELLA	CESTRELLA	06.04.2020	01
500001486427		NEW DOCUMENT	ALDOV	CESTRELLA	CESTRELLA	06.08.2018	00

EXECUTED	ALDOV	SINGLE PHASE MOTOR OPEN ROLLED STEEL FRAME 56 ODP	10005959899
CHECKED	CESTRELLA		000 / 01
RELEASED	CESTRELLA		
REL DT	06.08.2018	WMX Huehuetoca Product Engineering	SHEET 1 / 2

1 HP 04 Poles 60Hz 415149851

A

UNCONTROLLED COPY

RELEASED

ZME A3

WEG's property. Forbidden reproduction without previous authorization.