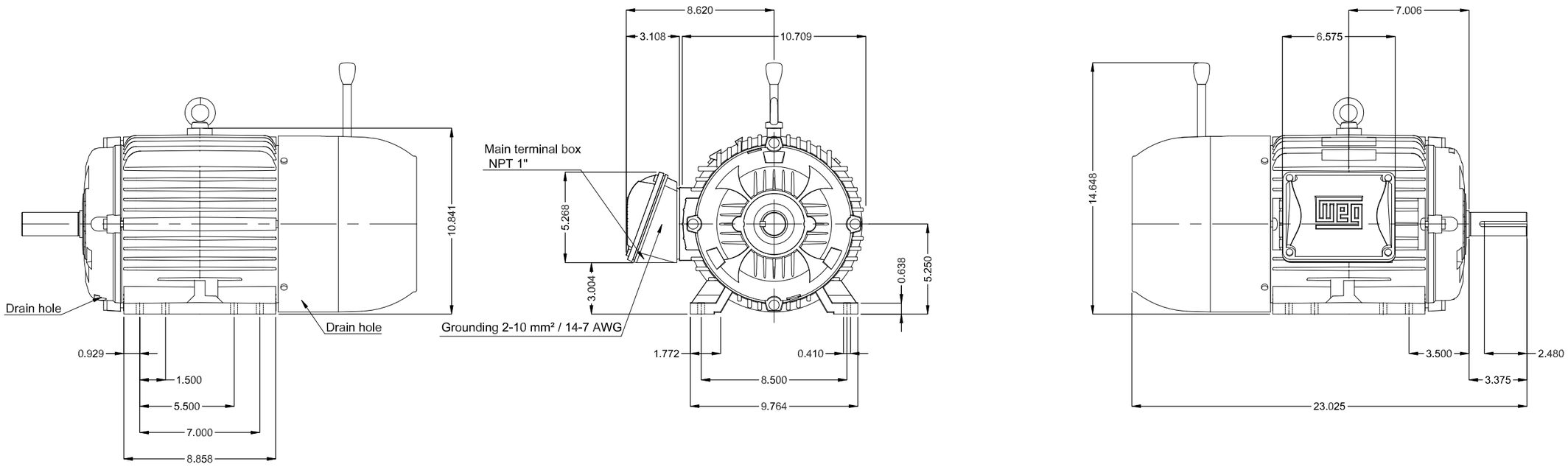

DE Shaft End

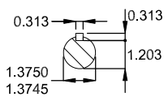

With brake 16 (125 Nm)
Color RAL 5009
Painting plan 207A
Mounting NEMA F-1
Mounting B3R(D)

5 HP 06 Poles 60 Hz | A

ECM	LOC	SUMMARY OF MODIFICATIONS	EXECUTED	CHECKED	RELEASED	DATE	VER
			HYBRISUSER				00

EXECUTED	HYBRISUSER	THREE PH. MOTOR W22 BRAKE MOTOR NEMA PREM. EFF.
CHECKED		FRAME 213/5T IP55 TEFC
RELEASED		
REL. DATE		

PREVIEW

WDD 00

SHEET /

Dimensions in inches

A3

WEG's property. Forbidden reproduction without previous authorization.