No reproduction of this drawing is allowed written permission of WEG Motores

EIXO		
PADRÃO	X	
OPCIONAL		
ESPECIAL		

Dimensões em polegada
Dimensions in inch

FOR APPROVAL
( ) Approved
( ) Approved with comments
( ) Not approved

THIS IS AN UPDATED REVISION, THE PREVIOUS ONE MUST BE DISREGARDED.

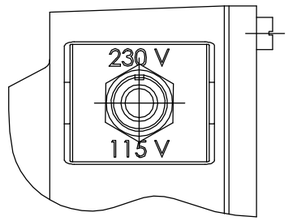

View X

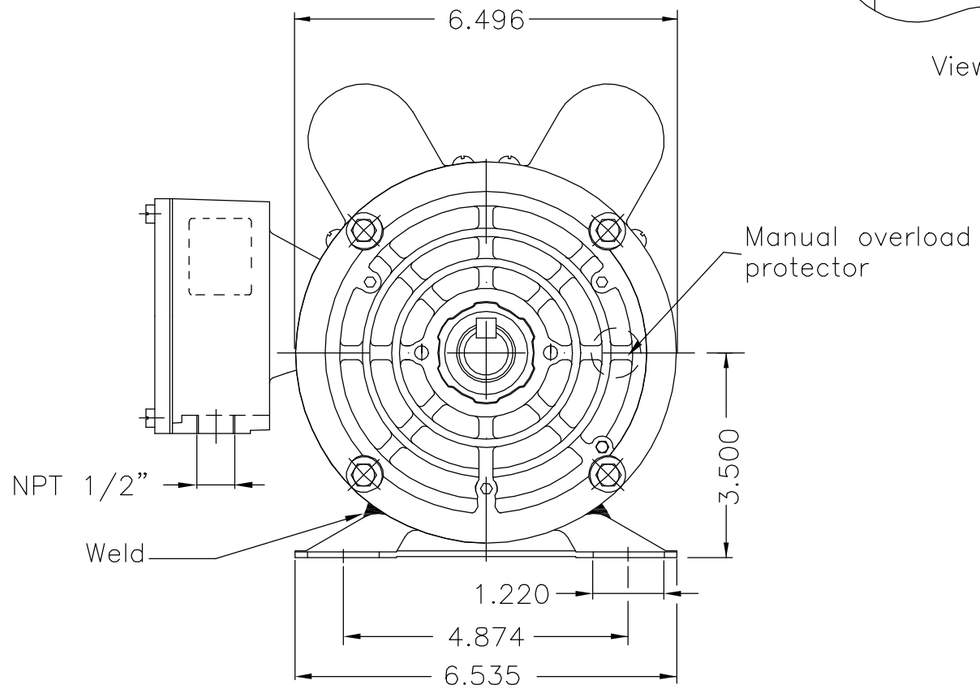

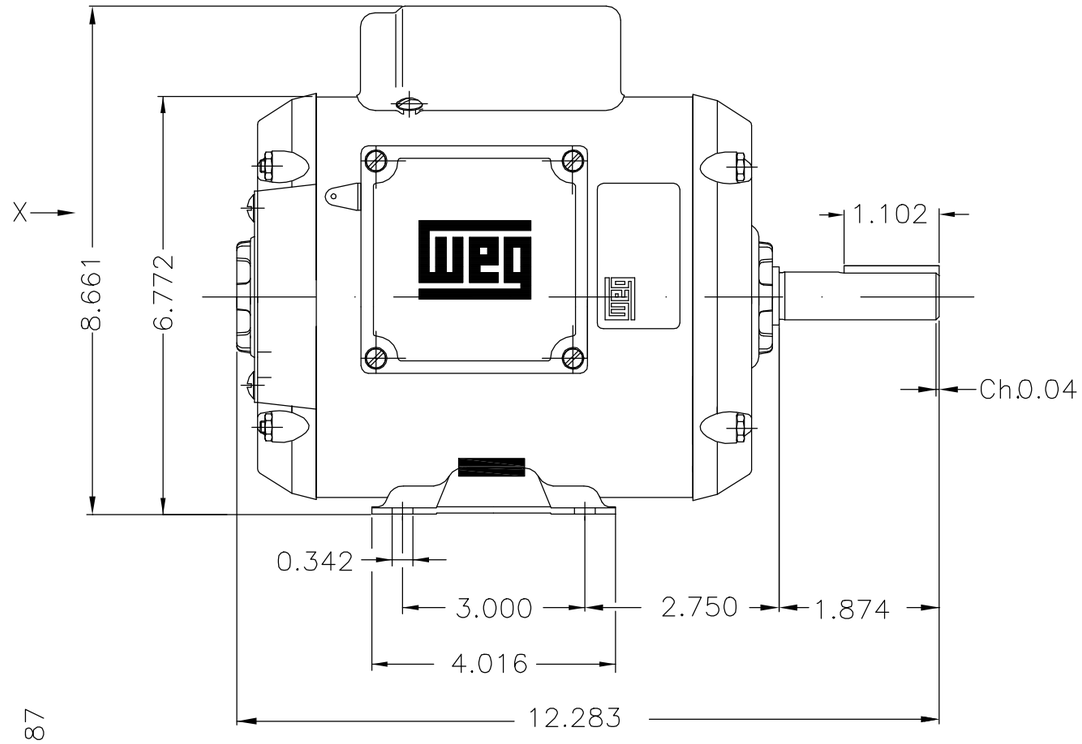

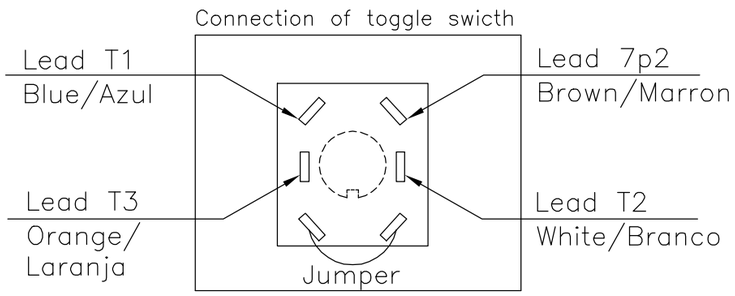

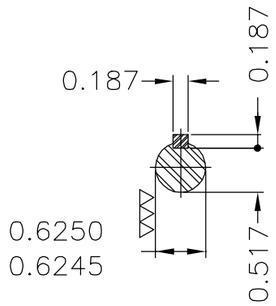

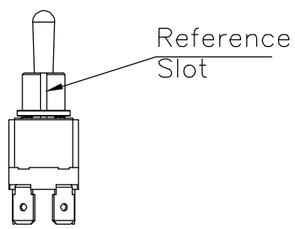

Embalagem especial 10362614 / Special packing 10362614
Sentido de rotação anti-horário / Counter clockwise rotation
Forma construtiva B3D / Mounting B3R(D)

WEG ELECTRIC CORP. - SUWANEE

ECM	LOC	SUMMARY OF MODIFICATIONS	EXECUTED	CHECKED	RELEASED	DATE	VER
500002212362		Alterado conf. PCR 100000146330	DEYKSON	CAIO2	CAIO2	13.09.2022	13
500002202967		Ajustado representação da haste.	LMERLO	MODENESI	MODENESI	30.08.2022	12

EXECUTED	DEISEM	SINGLE PHASE MOTOR COMPRESSOR DUTY	10000668303
CHECKED	DEISEM	FRAME D56 IP21 (ODP)	000 / 13
RELEASED	DEISEM	COMPRESSOR	
REL DT	03.11.2009	WMO LINHARES ENGENHARIA DE PRODUTO	SHEET 1 / 1

1.75 HP 02 Poles 60Hz

400730022 A

UNCONTROLLED COPY

RELEASED

ZME A3

WEG's property. Forbidden reproduction without previous authorization.