No reproduction of this drawing is allowed written permission of WEG Motores

EIXO	
PADRÃO	
OPCIONAL	
ESPECIAL	X

Dimensões em polegada
Dimensions in inches

THIS IS AN UPDATED REVISION, THE PREVIOUS ONE MUST BE DISREGARDED.

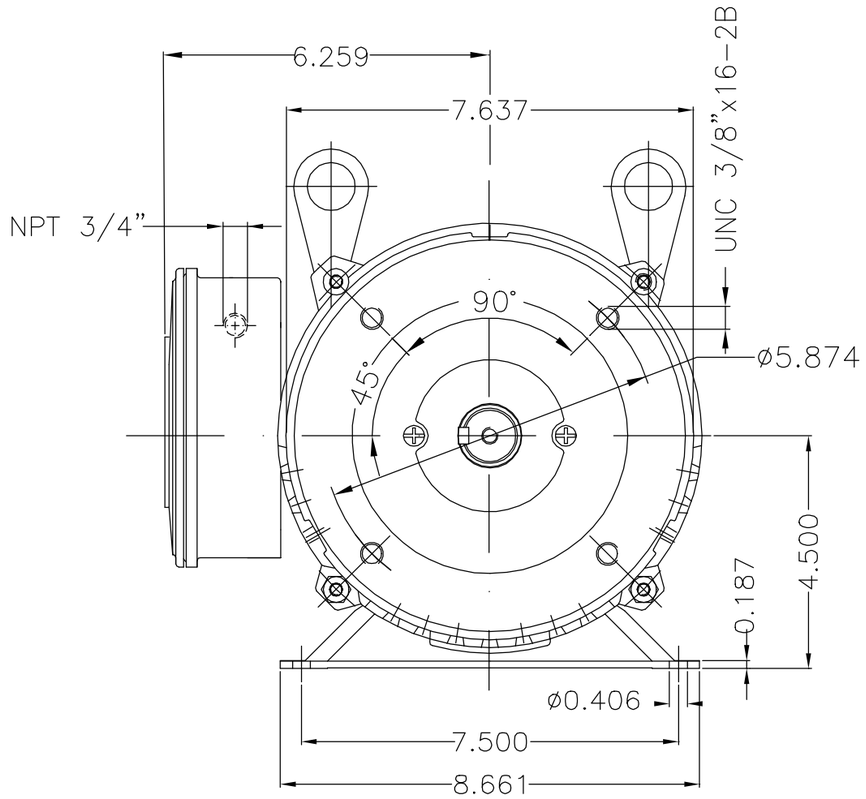

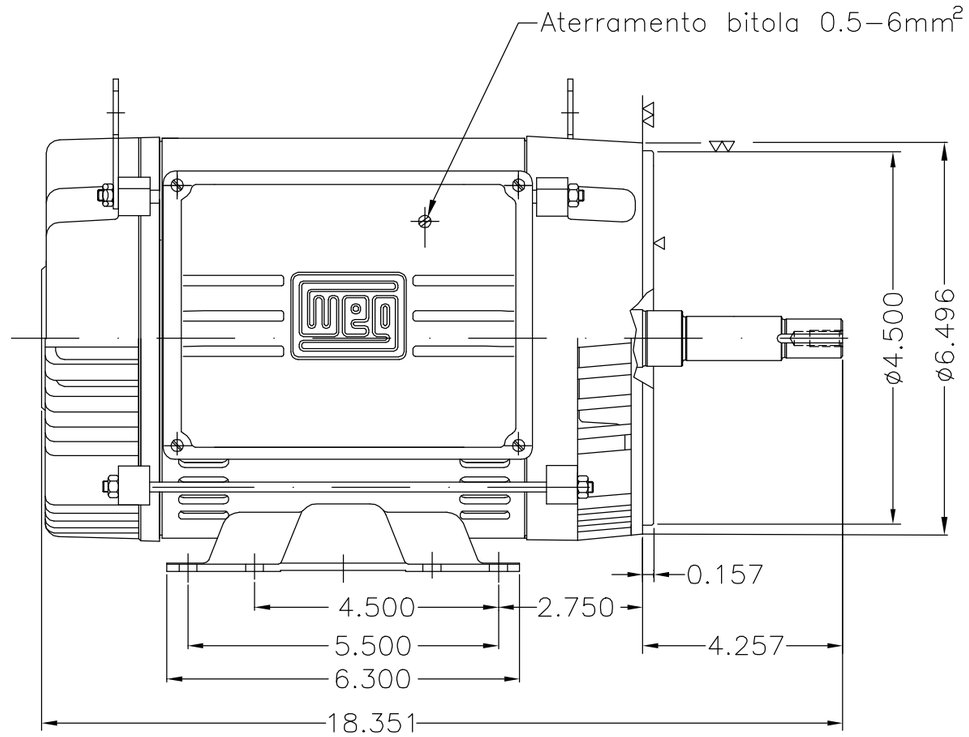

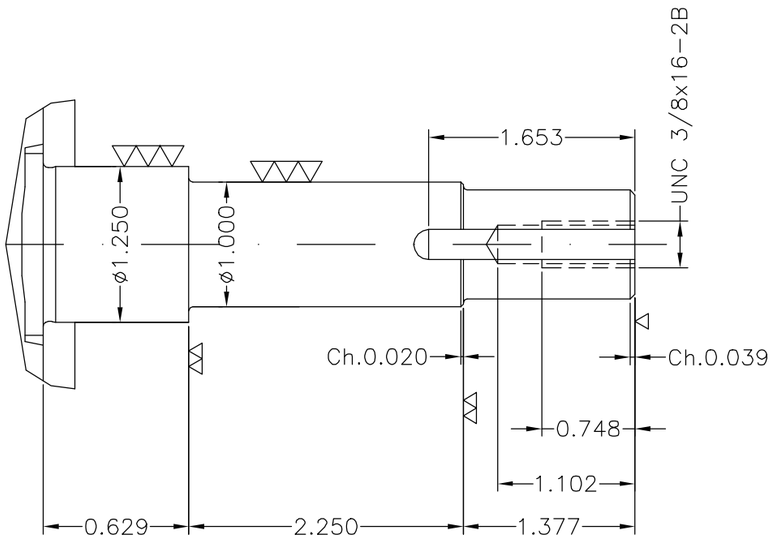

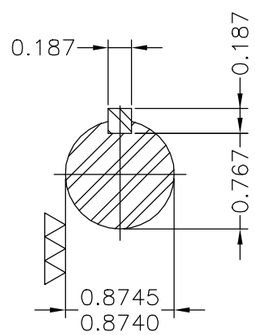

DE Shaft End

Graxa - Mobil Polyrex EM / Grease - Mobil Polyrex EM
Plano de pintura 207A / Painting plan 207A
Forma construtiva B34D / Mounting B34R(D)

WEG ELECTRIC CORP.

ECM	LOC	SUMMARY OF MODIFICATIONS	EXECUTED	CHECKED	RELEASED	DATE	VER
500001317339		ALTERADO CONFORME CLAIM 414683515	AKLOSOWSKI		RUBENSFM	30.05.2017	05
500000865572		ALT. CONFORME 413343587	PATRICKL		FABIOMP	10.03.2014	04

EXECUTED	PATRICKL	SINGLE PHASE MOTOR	10002560471
CHECKED		FRAME 182/4JM IP21 ODP	000 05
RELEASED	EMERSONRH		
REL DT	01.11.2013	WMO JARAGUA DO SUL ENGENHARIA DE PRODUTO	SHEET 1 / 1

5 HP	02 Poles	60 Hz	413072258/414683515	B	
3 HP	02 Poles	60 Hz	413072504	A	

UNCONTROLLED COPY

RELEASED

ZME A3

WEG's property. Forbidden reproduction without previous authorization.