No reproduction of this drawing is allowed written permission of WEG Motores

EIXO		
PADRÃO	X	Dimensões em polegada Dimensions in inch
OPCIONAL		
ESPECIAL		

FOR APPROVAL
( ) Approved
( ) Approved with comments
( ) Not approved

THIS IS AN UPDATED REVISION, THE PREVIOUS ONE MUST BE DISREGARDED.

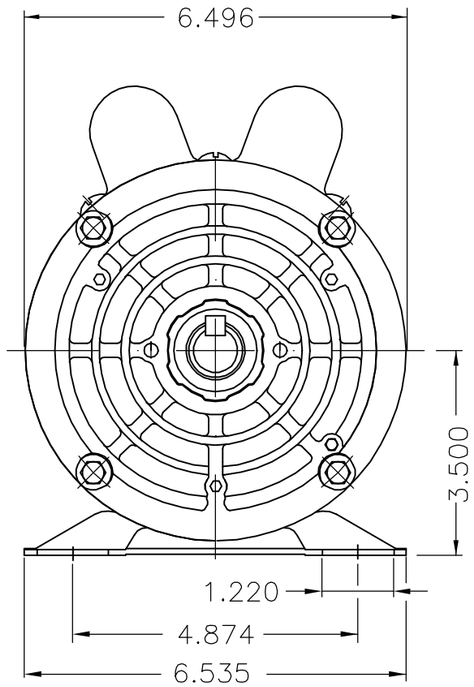

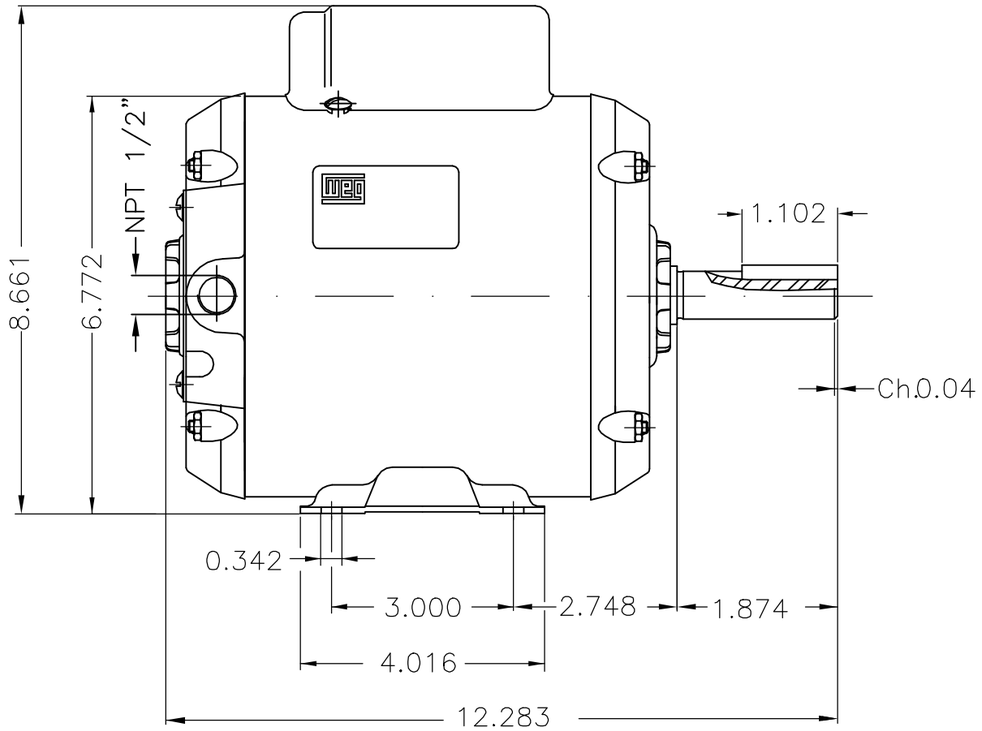

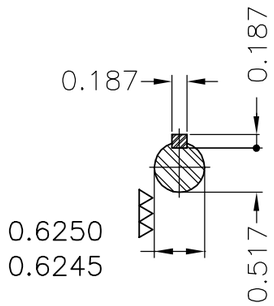

Potência na etiqueta identificada como "SPL" / SPL Horsepower listed in the HP field
Etiqueta com película protetora / Label with protective film
Embalagem – Pallet (10362615) / Package in pallet
Protetor Térmico Manual / Manual Overload Protector
Forma construtiva B3D / Mounting B3R(D)

WEG ELECTRIC CORP. – SUWANEE

MODIF. NUMBER	LOC	SUMMARY OF MODIFICATIONS	EXECUTED	CHECKED	RELEASED	DATE	VER
500000471963		ALT. CONFORME CLAIM 412161320	ALISSON		ANDERSONLB	07.06.2011	05
500000434832		ALT. CONFORME CLAIM 411241030	ALISSON		ANDERSONLB	31.03.2011	04

EXECUTED	JOSIANEH	SINGLE PHASE MOTOR COMPRESSOR DUTY FRAME D56 IP21 (ODP)	10000656182
CHECKED			000 / 05
RELEASED	DEISEM		
REL. DATE	22.10.2009	WMO-JGS JARAGUÁ DO SUL ENG. MOTORES MONOFÁSICOS	FOL/SHEET 1 / 1

3 HP 02 Poles 60Hz 400729899 A

UNCONTROLLED COPY
RELEASED
ZME – A3

Propriedade da WEG. Proibida reprodução sem autorização prévia./WEG's property. Forbidden reproduction without previous authorization.