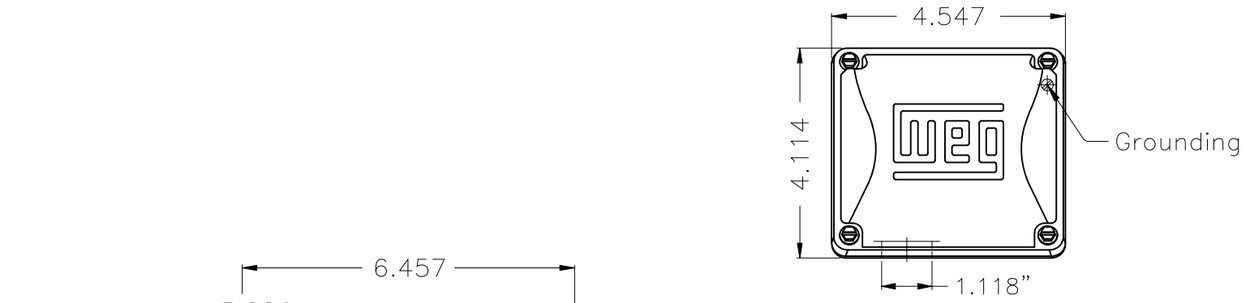

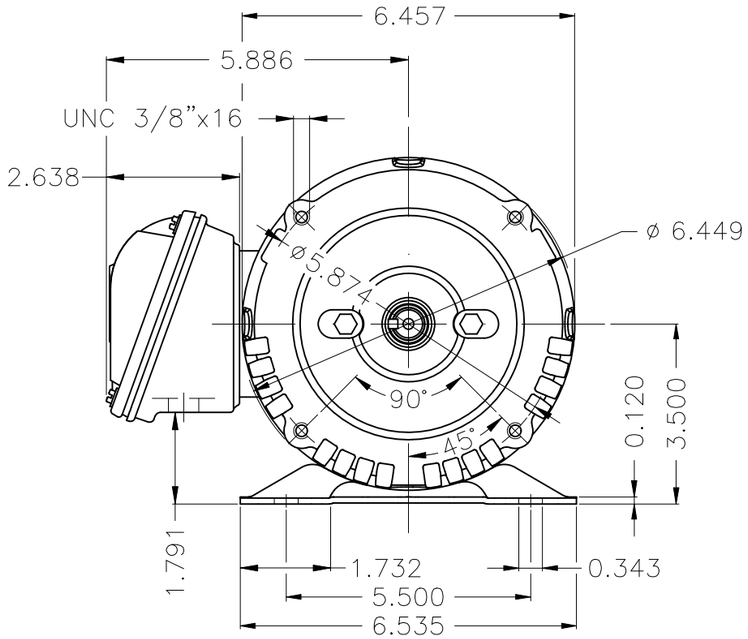

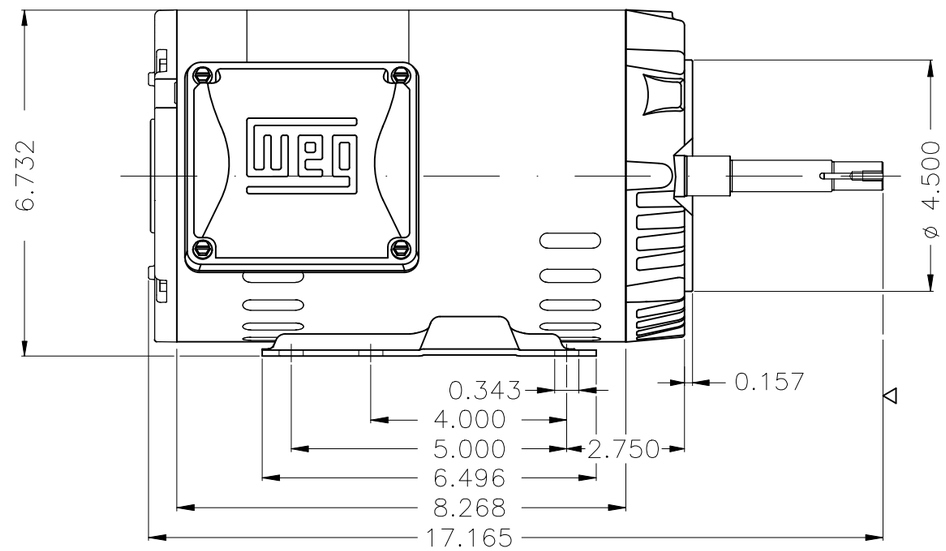

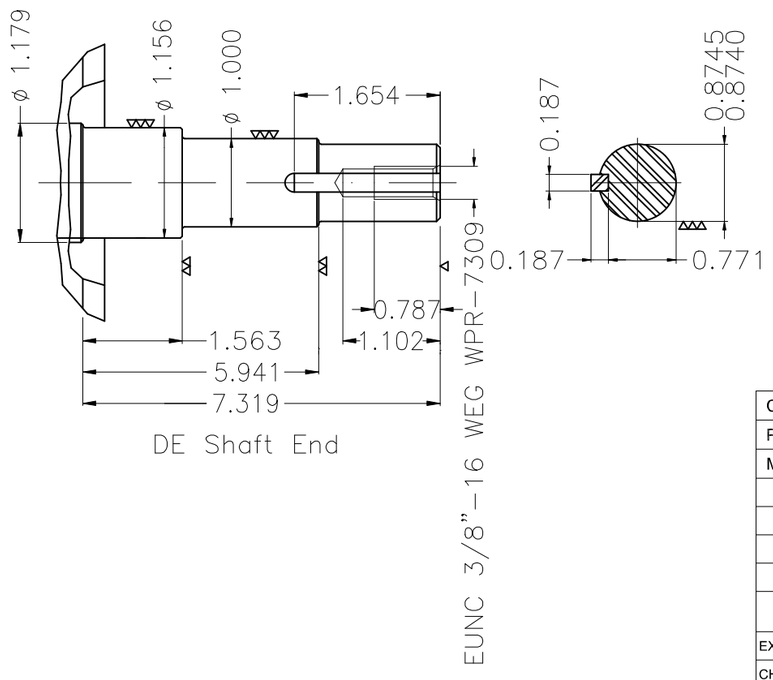

Color Munsell N 1 matte black							
Painting plan 207N							
Mounting F-1/B34R(D)							
			HYBRISUSER				00
ECM	LOC	SUMMARY OF MODIFICATIONS	EXECUTED	CHECKED	RELEASED	DATE	VER

EXECUTED	HYBRISUSER	THREE PH. MOTOR ROLLED STEEL CLOSE COUPLED PUMP JP TYPE NEMA PREM. EFF.	PREVIEW
CHECKED		FRAME 143/5JP IP21 ODP	WDD 00
RELEASED			
REL. DATE		WMO Jaragua do Sul Product Engineering	SHEET 1 / 1

2 HP 02 Poles 60 Hz

A

Dimensions in inches

XME A3

WEG's property. Forbidden reproduction without previous authorization.