EIXO/SHAFT	
PADRÃO/STANDARD	X
OPCIONAL/OPTIONAL	
ESPECIAL/SPECIAL	

Dimensões em polegadas
Dimensions in inches

THIS IS AN UPDATED REVISION, THE PREVIOUS ONE MUST BE DISREGARDED.

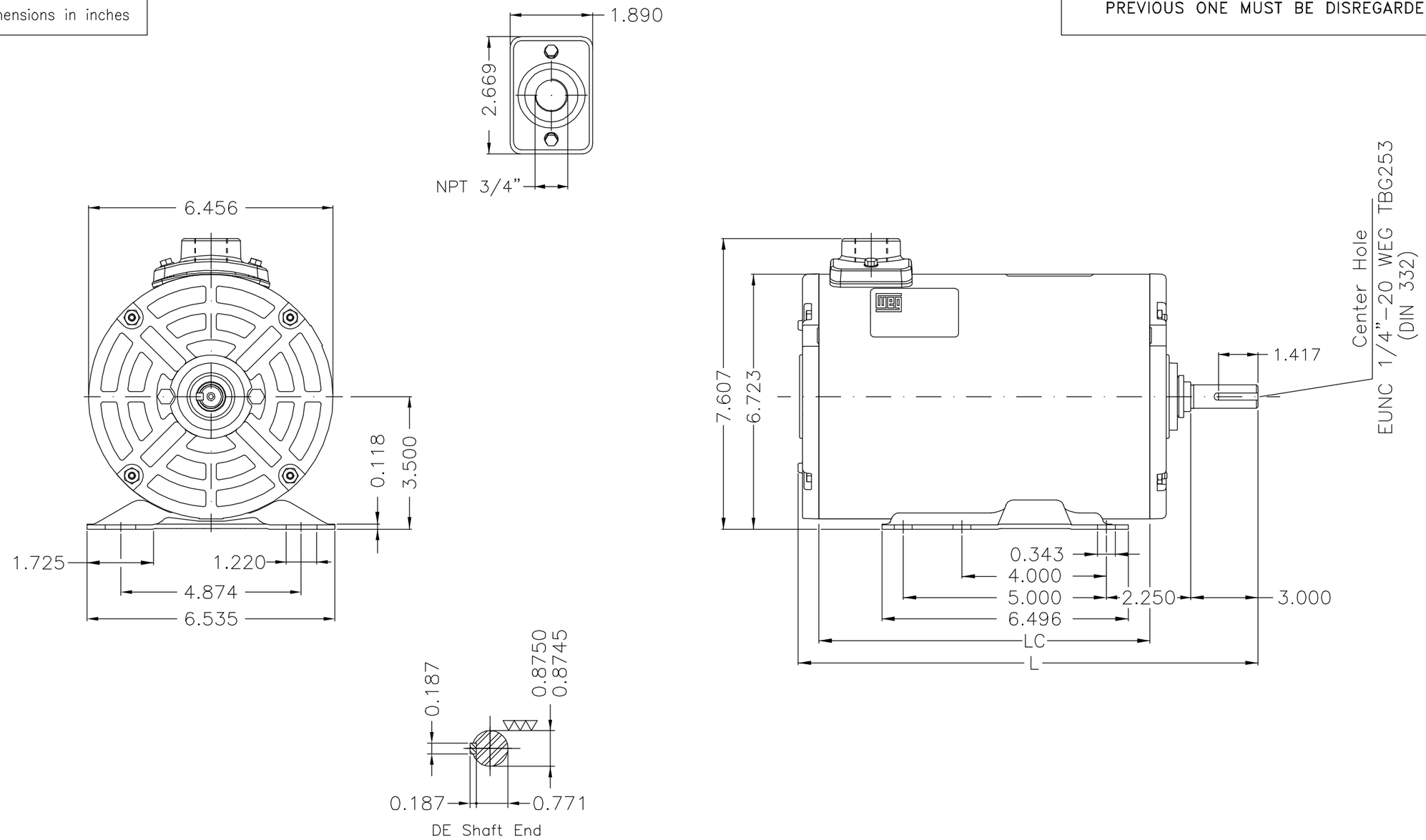

Comprimento dos cabos de acessórios 30+2" a partir da base / Accessories cables length 30+2" from the base

Comprimento do cabo de aterramento 30+2" a partir da base / Grounding lead 30+2" length from base

Comprimento dos cabos de ligação 30+2" a partir da base / Connection leads 30+2" length from base

Etiqueta sobressalente sem logotipos de certificação e sem número de série fornecida em avulso / Spare label without certification logo and without serial number supplied loose

Forma construtiva F-3/B3T / Mounting F-3/B3T

WEG ELECTRIC CORP.

ECM	LOC	SUMMARY OF MODIFICATIONS	EXECUTED	CHECKED	RELEASED	DATE	VER
500001355979		ALTERADO CONFORME ECM	ARIVABENE		MENSOR	11.09.2017	04
500001186609		ALTERAÇÃO CONFORME ECM.	LGAMA		TOBIASR	08.06.2016	03

3 / 4.5 HP	04 Poles	60Hz	413759943	9.055	13.582	B
1.5 / 3 HP	04 Poles	60Hz	413760289	8,268	12.795	A

EXECUTED	PATRICKL	THREE PHASE TEAO ROLLED STEEL FRAME 143/5TZ IP55	10003403642
CHECKED			000 / 04
RELEASED	EMERSONRH		
REL DT	03.03.2015	WMO LINHARES ENGENHARIA DE PRODUTO	SHEET 1 / 1

UNCONTROLLED COPY

RELEASED

ZME A3

WEG's property. Forbidden reproduction without previous authorization.