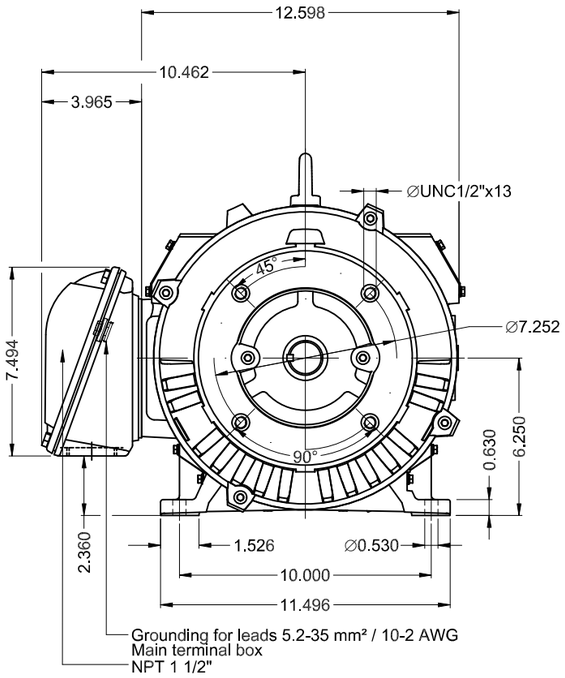

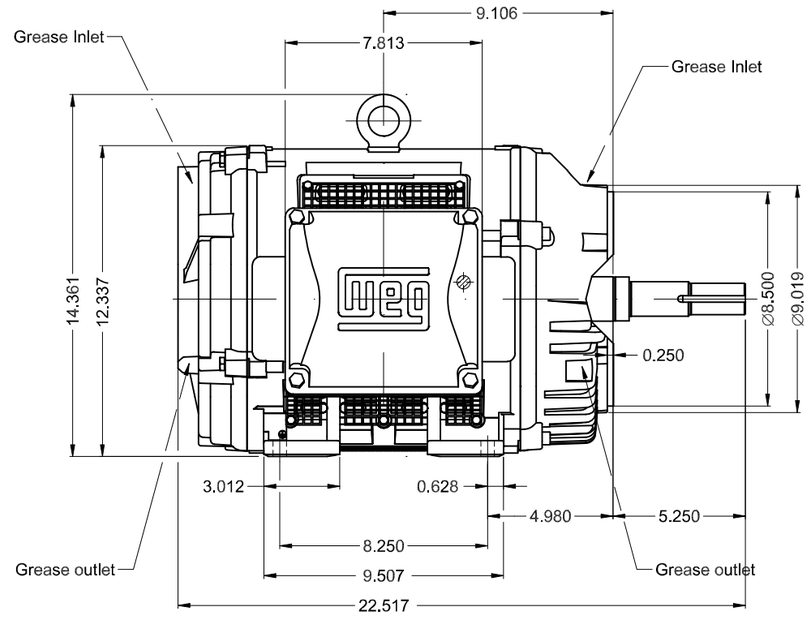

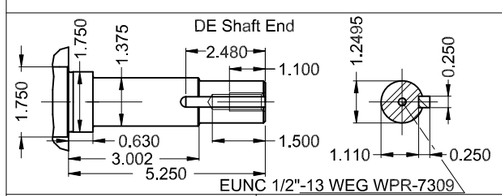

20 HP 02 Poles 60 Hz | A

1:6

ECM	LOC	SUMMARY OF MODIFICATIONS	EXECUTED	CHECKED	RELEASED	DATE	VER
			HYBRISUSER				00

Color RAL 5009
Painting plan 203A
Mounting NEMA F-1
Mounting B34R(D)

EXECUTED	HYBRISUSER
CHECKED	
RELEASED	
REL. DATE	

THREE PH. MOTOR W40 CLOSE COUPLED PUMP JM TYPE NEMA PREM. EFF.
FRAME 254JM IP23 ODP

PREVIEW

WDD 00

WMO Jaragua do Sul Product Engineering SHEET 1 / 1

Dimensions in inches

XME A3

WEG's property. Forbidden reproduction without previous authorization.