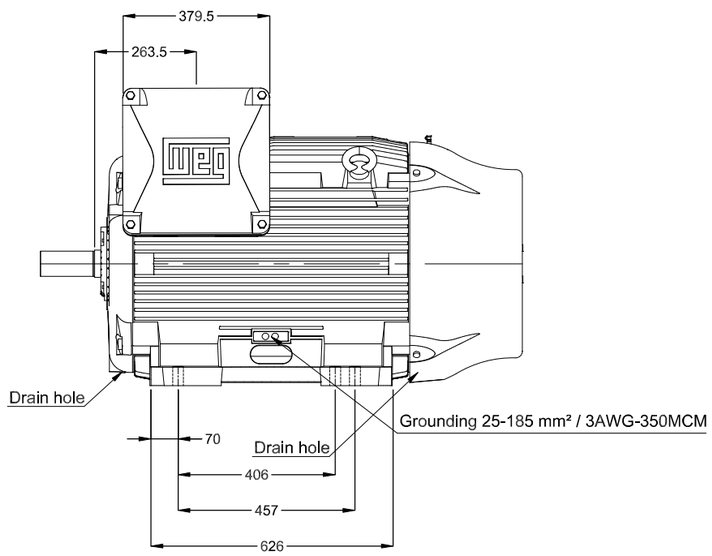

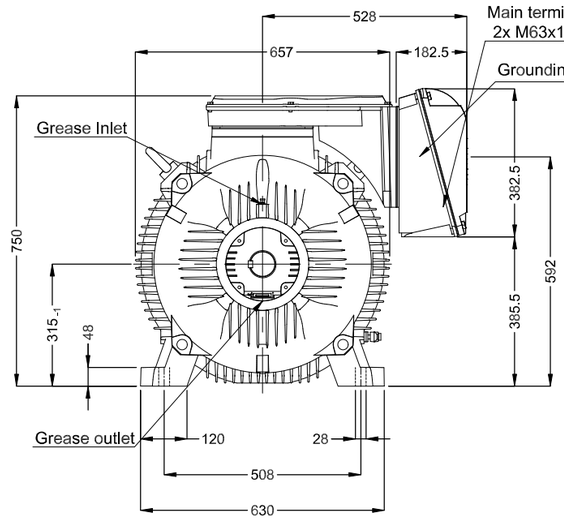

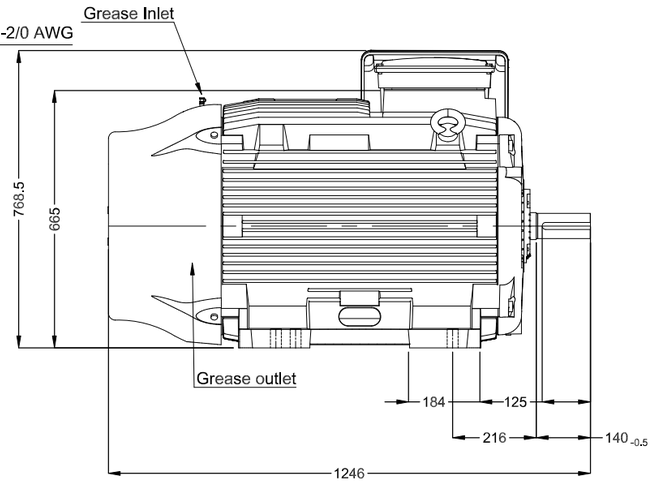

Without vertical jackscrews
NDE endshield with electrically insulated bearing hub
Color RAL 5009
Painting plan 203A
Mounting B3L(E)

DE Shaft End

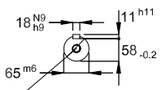

DM20 WEG WPR-7339 (DS DIN332)

150 HP 02 Poles 60 Hz | A

ECM	LOC	SUMMARY OF MODIFICATIONS	EXECUTED	CHECKED	RELEASED	DATE	VER
			HYBRISUSER				00

EXECUTED	HYBRISUSER
CHECKED	
RELEASED	
REL. DATE	

THREE PH. MOTOR W22 IE3
FRAME 315S/M IP55 TEFC

PREVIEW
WDD 00
SHEET /

Dimensions in mm

A3

WEG's property. Forbidden reproduction without previous authorization.