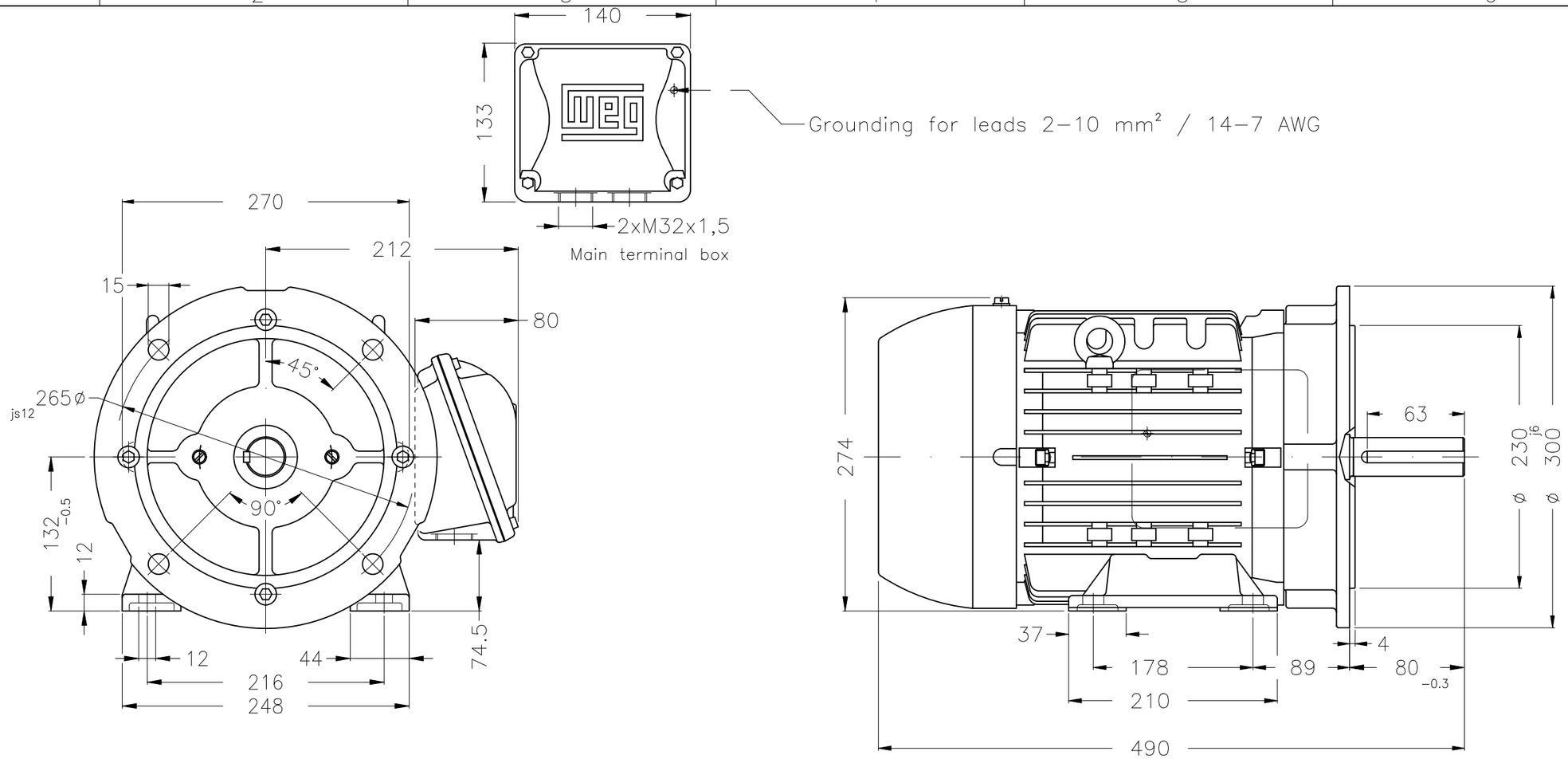

Bearing cap
Color RAL 5009
Painting plan 207N
Mounting B35L(E)

DE Shaft End

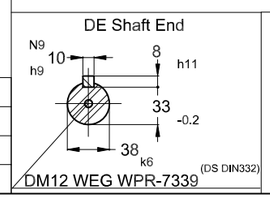

DM12 WEG WPR-7339

5.5 HP 06 Poles 60 Hz | A

ECM	LOC	SUMMARY OF MODIFICATIONS	EXECUTED	CHECKED	RELEASED	DATE	VER
			HYBRISUSER				00

EXECUTED	HYBRISUSER	THREE PH. MOTOR MULTIMOUNTIN IE3	PREVIEW
CHECKED		FRAME 132M IP55 TEFC	WDD 00
RELEASED			
REL. DATE		WMO Jaragua do Sul Product Engineering	SHEET 1 / 1

Dimensions in mm

XME A3

WEG's property. Forbidden reproduction without previous authorization.