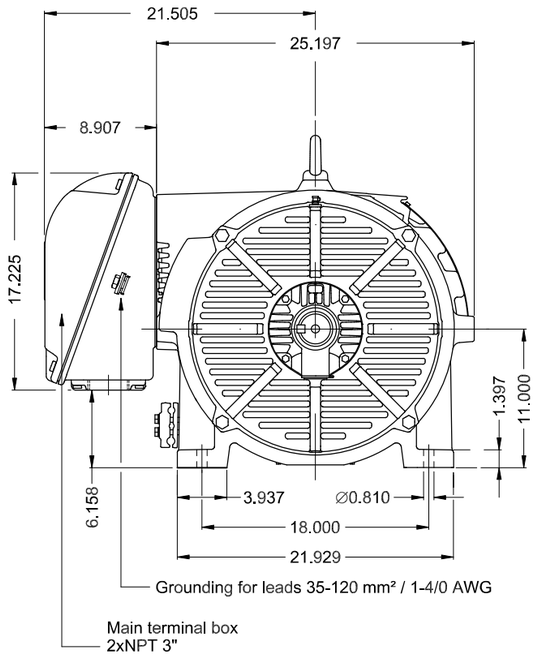

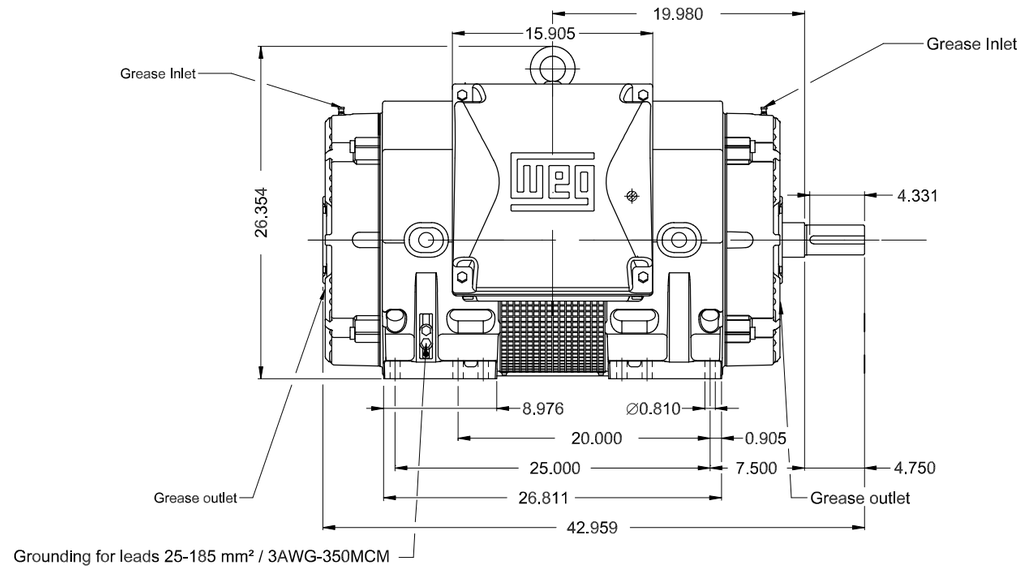

Design B
Color RAL 3002
Painting plan 203A
Mounting NEMA F-1
Mounting B3R(D)

DE Shaft End

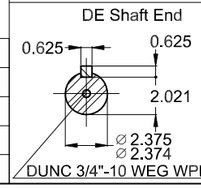

400 HP 02 Poles 50 Hz | A

1:12

ECM	LOC	SUMMARY OF MODIFICATIONS	EXECUTED	CHECKED	RELEASED	DATE	VER
			HYBRISUSER				00

EXECUTED	HYBRISUSER
CHECKED	
RELEASED	
REL. DATE	

THREE PH. MOTOR W40 HIGH EFF.
FRAME 447/9TS IP23 ODP

WMO Jaragua do Sul Product Engineering

PREVIEW
WDD 00
SHEET 1 / 1

Dimensions in inches

XME A3

WEG's property. Forbidden reproduction without previous authorization.