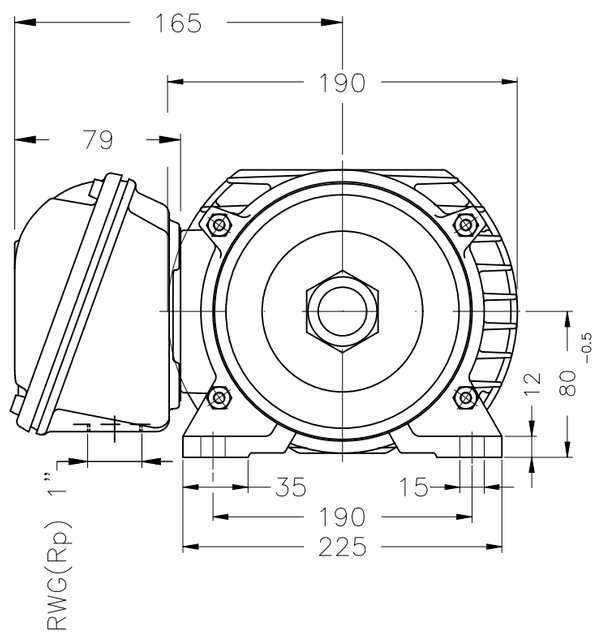

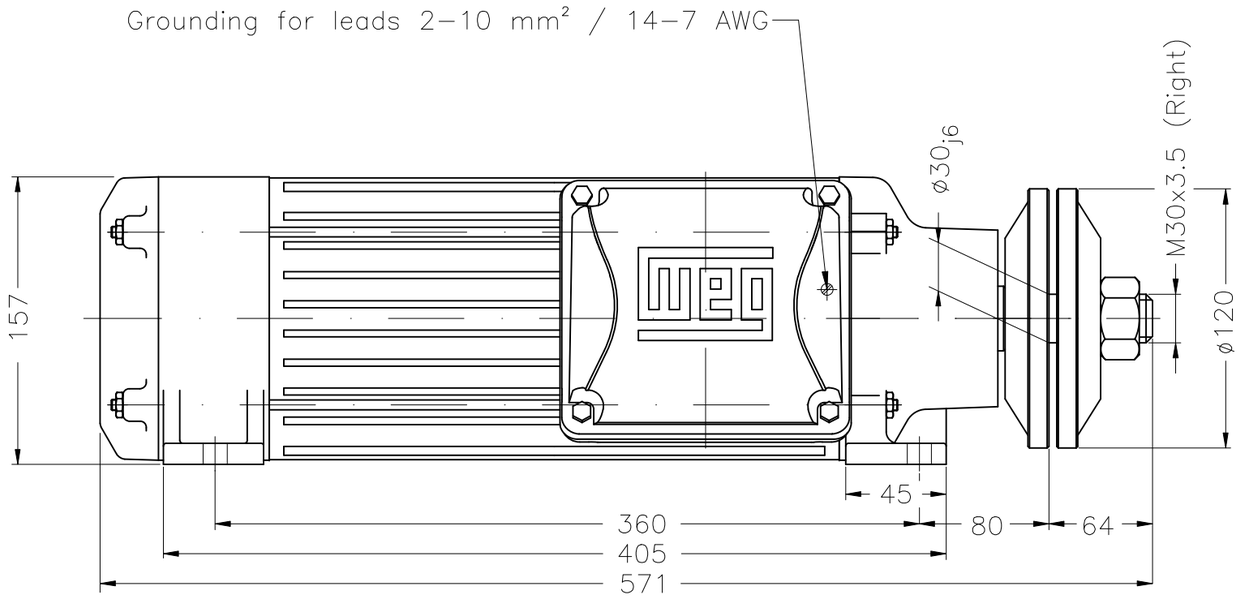

7.5 HP 02 Poles 60 Hz							A
			HYBRISUSER				00
ECM	LOC	SUMMARY OF MODIFICATIONS	EXECUTED	CHECKED	RELEASED	DATE	VER

Counterclockwise rotation
Color RAL 7022
Painting plan 207A
Mounting B3R(D)

EXECUTED	HYBRISUSER	THREE PH. MOTOR SAW ARBOR MOTOR	PREVIEW
CHECKED		FRAME 80L/MS IP54 TEFC	WDD 00
RELEASED			
REL. DATE		WMO Jaragua do Sul Product Engineering	SHEET 1 / 1

Dimensions in mm

XME A3

WEG's property. Forbidden reproduction without previous authorization.