EIXO/SHAFT		Dimensões em polegadas Dimensions in inches
PADRÃO/STANDARD		
OPCIONAL/OPTIONAL		
ESPECIAL/SPECIAL	X	

CERTIFIED
WEG MOTORES
Certified document.
Not subject to changes.

THIS IS AN UPDATED REVISION, THE PREVIOUS ONE MUST BE DISREGARDED.

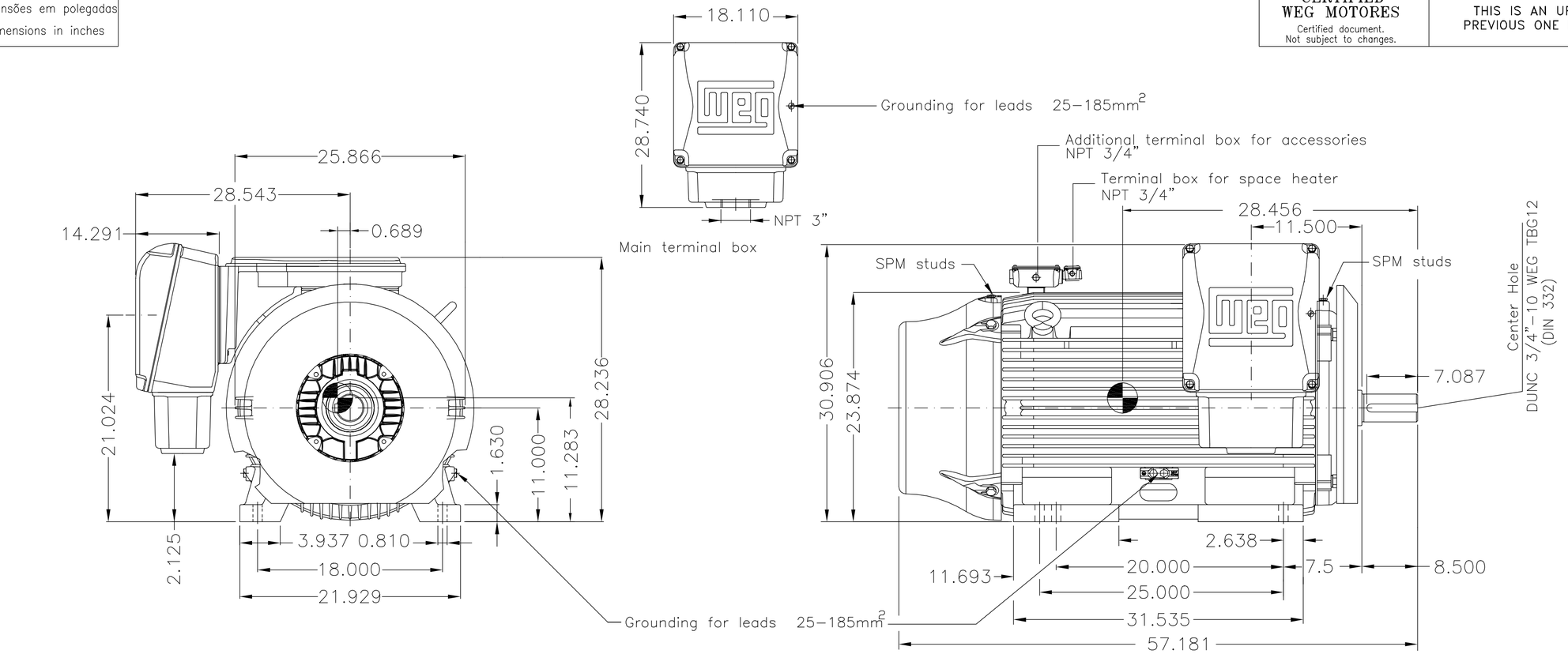

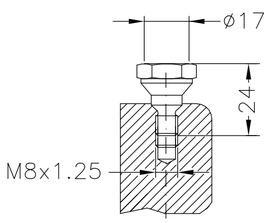

Vibration sensor studs detail

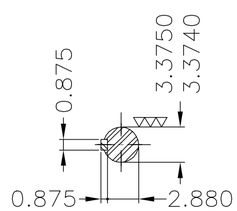

DE Shaft End

Graxeira prolongada / Extended grease fitting
Proteção térmica nos mancais – PT100 (1 por mancal – 3 fios)
Bearings thermal protection – PT100 (1 per bearing – 3 wires)
Proteção térmica PT100 (2 por fase/3 fios)
Winding thermal protection – PT100 (2 per phase – 3 wires)
Motor com características IEEE841 / Motor with IEEE841 features
Rolamento traseiro C3 / C3 NDE bearing
Ventilador externo com pintura epoxi / External fan coated with epoxy coating
Terminal com furo de diâmetro 13 mm para pino de ligação
Terminal with 13 mm diameter hole for connection bolt
Dreno Roscado Tipo "T" / Type "T" threaded drain plug
Terminal de aterramento adicional na carcaça (simetricamente oposto) em bronze
Additional bronze grounding lug on frame (symmetrically opposite)
Aplicar óleo protetivo Tirroil nos encaixes das tampas / Tirroil oil applied on endshields fittings
Ventilador especial (código WEG 10820165) / Special fan (WEG code 10820165)
Junta de vedação especial / Special sealing joint
Pintura interna tropicalizada conforme IEEE841 / Tropicalized internal painting according to IEEE841
Balanceamento reduzido ½ chaveta / Reduced balancing with half key
Bobinas seladas (2x VPI + Pulver) / Sealed windings (2x VPI + Pulver)
Pintar interior da caixa de ligação com cor Munsell 2.5 YR 6/14
Finish color Munsell 2.5 YR 6/14 inside of terminal box
Vedação – INPRO/SEAL / Sealing – INPRO/SEAL
Planicidade especial dos pés conforme IEEE841/API 541
Special feet flatness according to IEEE841/API 541
Saída de graxa conforme IEEE841 / Grease outlet according to IEEE841
Categoria A / Design A
Ventilador de Alumínio / Aluminum fan
Tampa traseira com mancal eletricamente isolado
NDE endshield with electrically insulated bearing hub
Defletor de ar dianteiro / Drive-End Air Deflector
Plano de pintura 202E / Painting plan 202E
Forma construtiva NEMA F-1 / Mounting NEMA F-1
Forma construtiva B3D / Mounting B3R(D)

WEG ELECTRIC CORPORATION – WEC

ECM	LOC	SUMMARY OF MODIFICATIONS	EXECUTED	CHECKED	RELEASED	DATE	VER
500002383401		PCR 100000181981	FRANCINES	DIEGOU	DIEGOU	24.05.2023	09
500001961380		ZC 418298716	JACKSONHM	DIEGOU	DIEGOU	05.07.2021	08

Resistência de aquecimento 110 a 127 V / Space heaters 110 to 127 V
Carcaça com furação para pinos guia / Frame designed for dowel pins
Apto a sensor de vibração SPM / SPM studs

200 HP 06 Poles 60Hz 413625303/0 ELET/MEC A

EXECUTED	DVEGINI	THREE-PHASE W22Xec MOTOR	10003200275
CHECKED	CVITORINO		000 09
RELEASED	CVITORINO		
REL DT	07.11.2014	WMO JARAGUA DO SUL ENGENHARIA DE PRODUTO	SHEET 1 / 1

UNCONTROLLED COPY
RELEASED
A2
ZME

WEG's property. Forbidden reproduction without previous authorization.