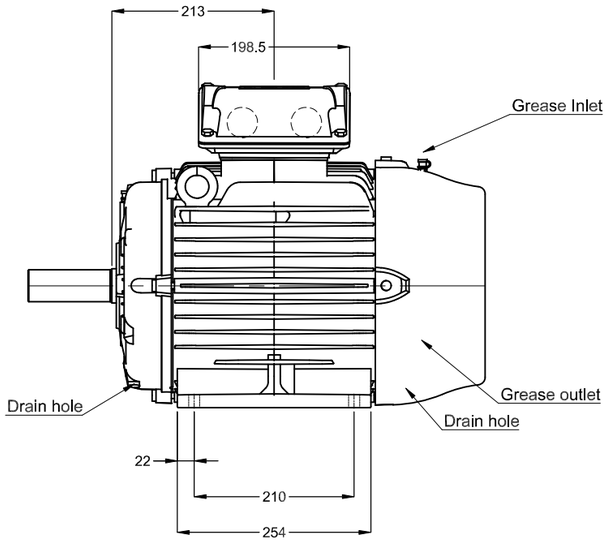

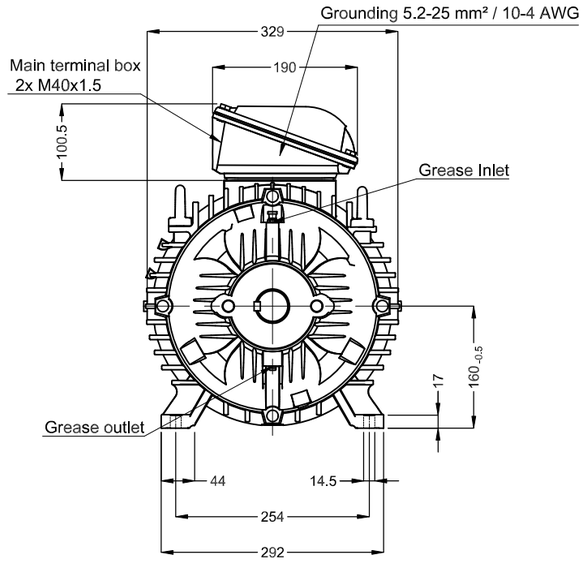

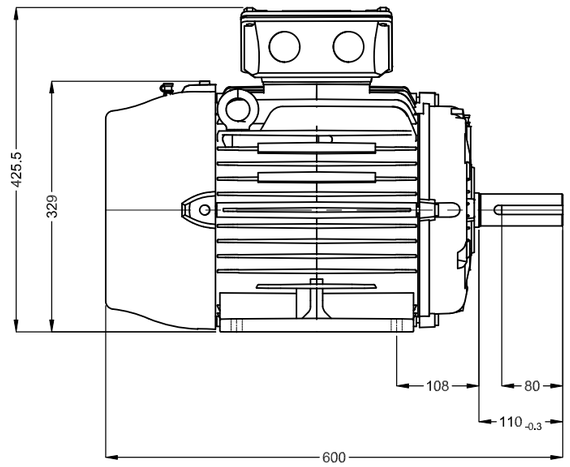

Color RAL 5009

Painting plan 203A

Mounting B3T

DE Shaft End

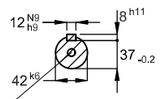

(DS DIN332)

DM16 WEG WPR-7339

7.5 HP 08 Poles 60 Hz | A

ECM	LOC	SUMMARY OF MODIFICATIONS	EXECUTED	CHECKED	RELEASED	DATE	VER
			HYBRISUSER				00

EXECUTED	HYBRISUSER
CHECKED	
RELEASED	
REL. DATE	

THREE PH. MOTOR W22 IE3

FRAME 160M IP55 TEFC

PREVIEW

WDD 00

SHEET /

Dimensions in mm

A3

WEG's property. Forbidden reproduction without previous authorization.