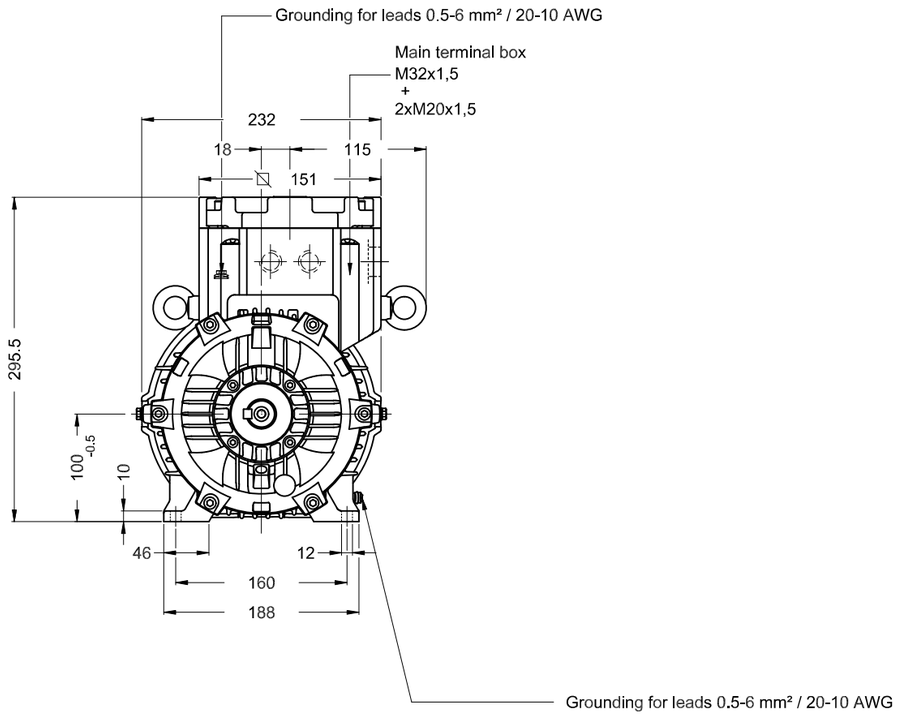


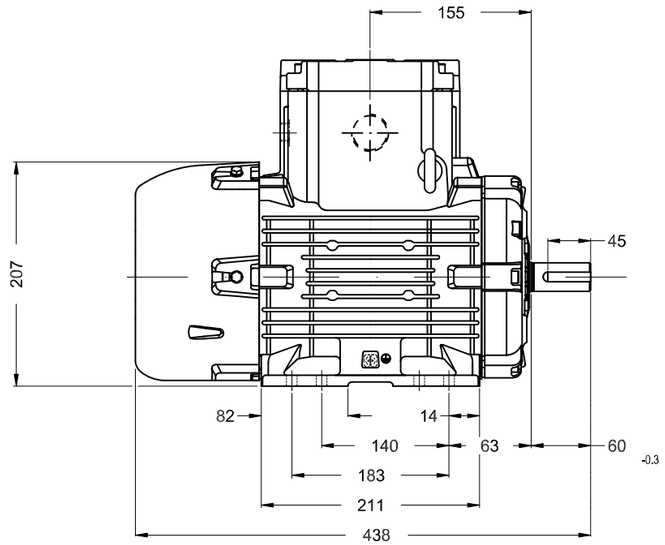


Color RAL 5009

Painting plan 205P

Mounting B3T

DE Shaft End

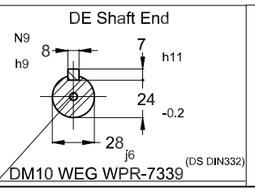


DM10 WEG WPR-7339

1.5 kW 06 Poles 50 Hz | A

| ECM | LOC | SUMMARY OF MODIFICATIONS | EXECUTED | CHECKED | RELEASED | DATE | VER |
|---|---|---|---|---|---|---|---|
| | | | HYBRISUSER | | | | 00 |

| | | | |
|---|---|---|---|
| EXECUTED | HYBRISUSER | THREE PH. MOTOR W22Xdb IE2 | PREVIEW |
| CHECKED | | FRAME 100L IP56 TEFC | WDD 00 |
| RELEASED | | | |
| REL. DATE | | WMO Jaragua do Sul Product Engineering | SHEET 1 / 1 |

Dimensions in mm

XME A3

WEG's property. Forbidden reproduction without previous authorization.