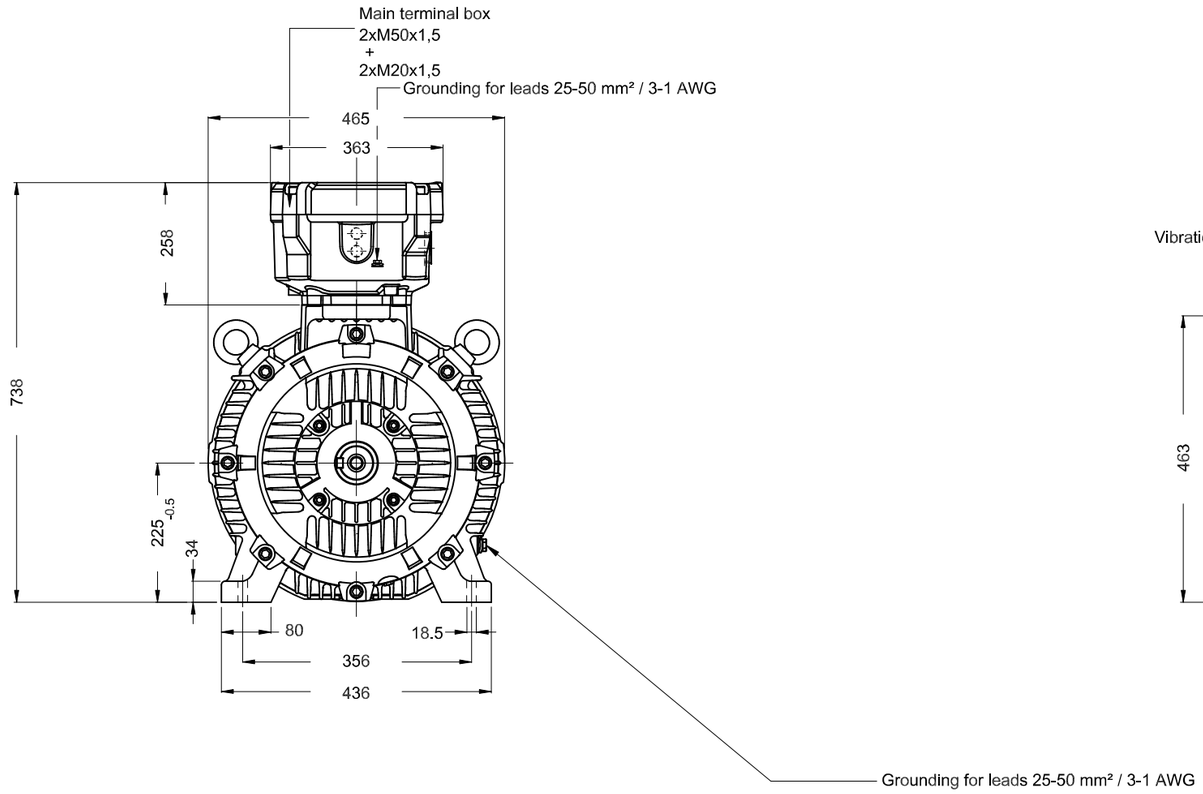

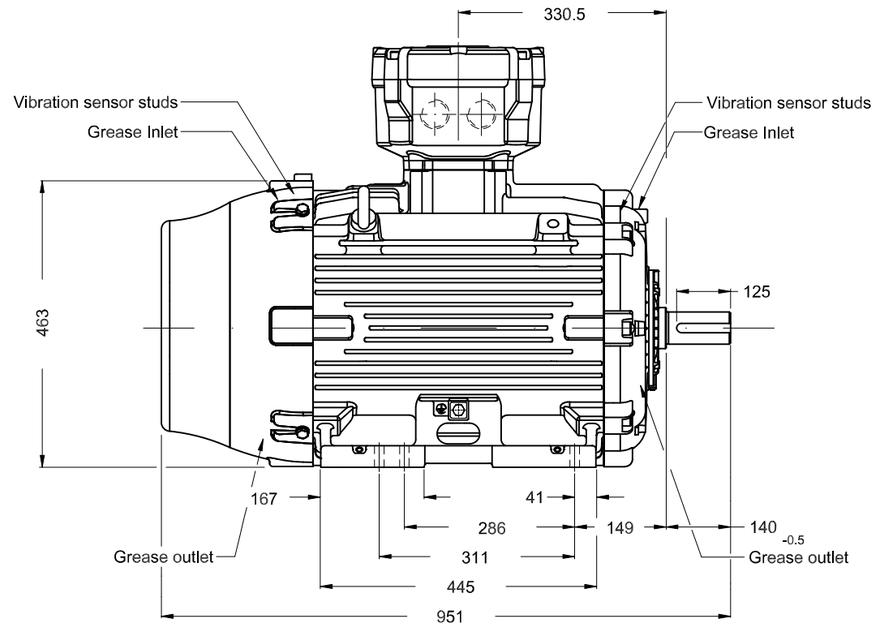

SPM studs
Color RAL 5009
Painting plan 205P
Mounting B3T

DE Shaft End

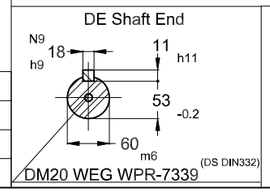

Vibration sensor studs detail

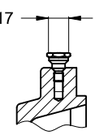

37 kW 04 Poles 50 Hz | A

ECM	LOC	SUMMARY OF MODIFICATIONS	HYBRISUSER EXECUTED	CHECKED	RELEASED	DATE	00 VER

EXECUTED	HYBRISUSER	THREE PH. MOTOR W22Xdb IE3	PREVIEW
CHECKED		FRAME 225S/M IP56 TEFC	WDD 00
RELEASED			
REL. DATE		WMO Jaragua do Sul Product Engineering	SHEET 1 / 1

Dimensions in mm

XME A3

WEG's property. Forbidden reproduction without previous authorization.