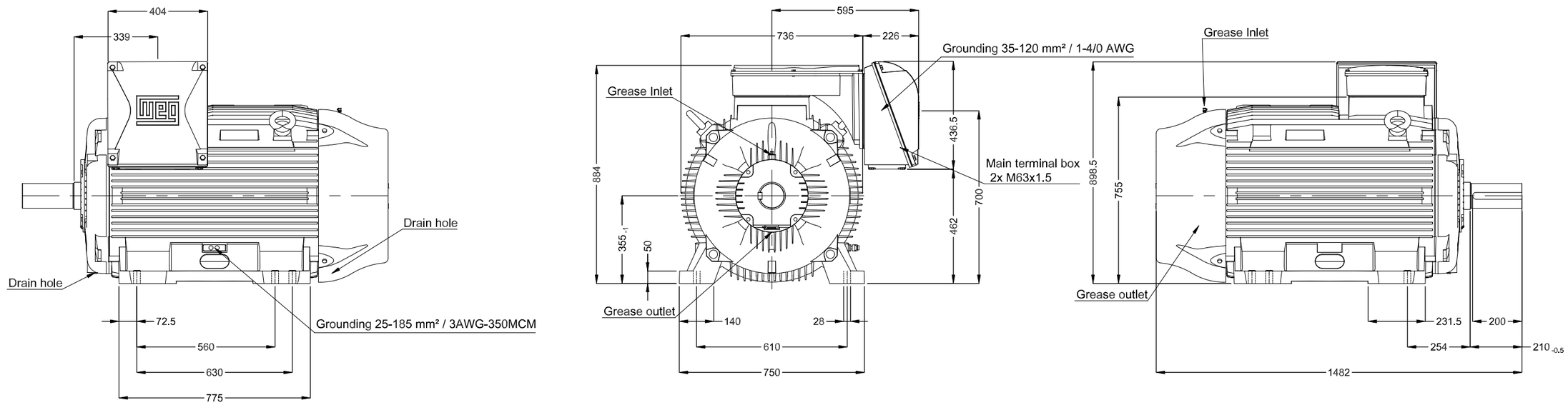


NDE endshield with electrically insulated bearing hub

Color RAL 5009

Painting plan 203A

Mounting B3L(E)

DE Shaft End

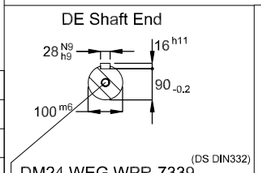


DM24 WEG WPR-7339

400 HP 06 Poles 60 Hz | A

| ECM | LOC | SUMMARY OF MODIFICATIONS | EXECUTED | CHECKED | RELEASED | DATE | VER |
|---|---|---|---|---|---|---|---|
| | | | HYBRISUSER | | | | 00 |

| | |
|---|---|
| EXECUTED | HYBRISUSER |
| CHECKED | |
| RELEASED | |
| REL. DATE | |

THREE PH. MOTOR W22 IE2

FRAME 355M/L IP55 TEFC

PREVIEW

WDD 00

SHEET /

Dimensions in mm

A3

WEG's property. Forbidden reproduction without previous authorization.