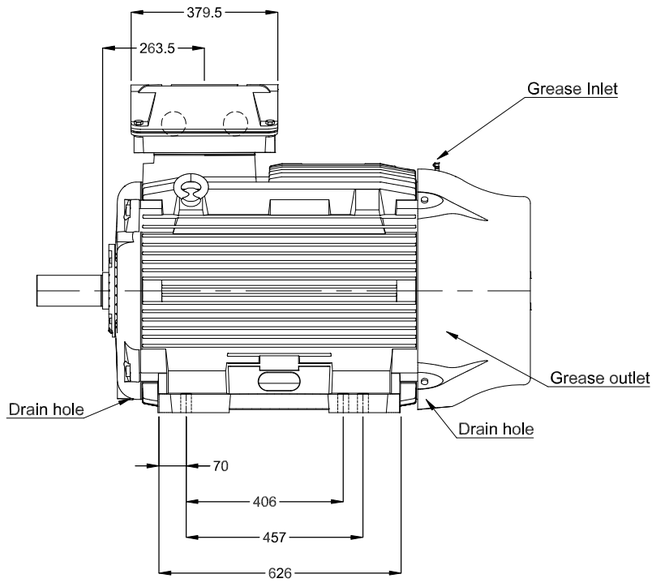

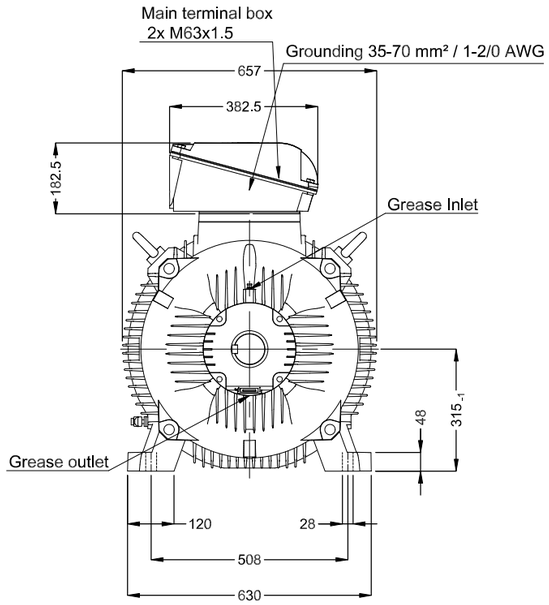

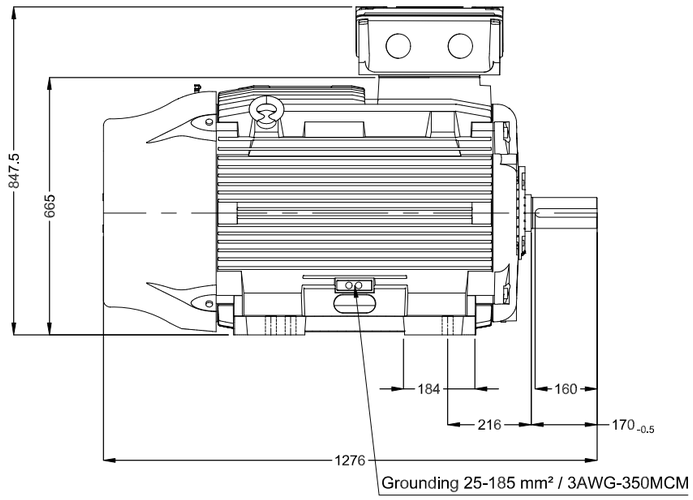

Without vertical jackscrews
DE roller bearing
Shaft locking device
Shaft material - AISI/SAE 4140
NDE endshield with electrically insulated bearing hub
Color RAL 5009
Painting plan 203A
Mounting B3T

DE Shaft End

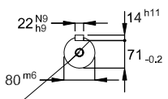

(DS DIN332)
DM20 WEG WPR-7339

100 HP 08 Poles 60 Hz | A

ECM	LOC	SUMMARY OF MODIFICATIONS	EXECUTED	CHECKED	RELEASED	DATE	VER
			HYBRISUSER				00

EXECUTED	HYBRISUSER	THREE PH. MOTOR W22 IE2
CHECKED		FRAME 315S/M IP55 TEFC
RELEASED		
REL. DATE		

PREVIEW
WDD 00
SHEET /

Dimensions in mm
A3

WEG's property. Forbidden reproduction without previous authorization.