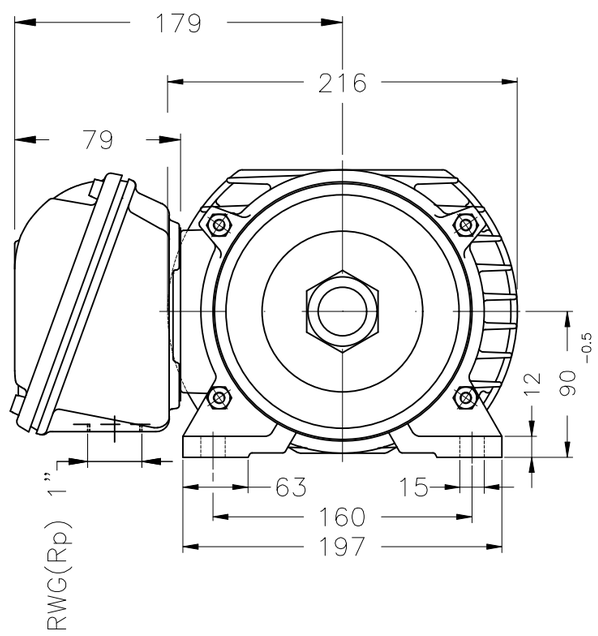

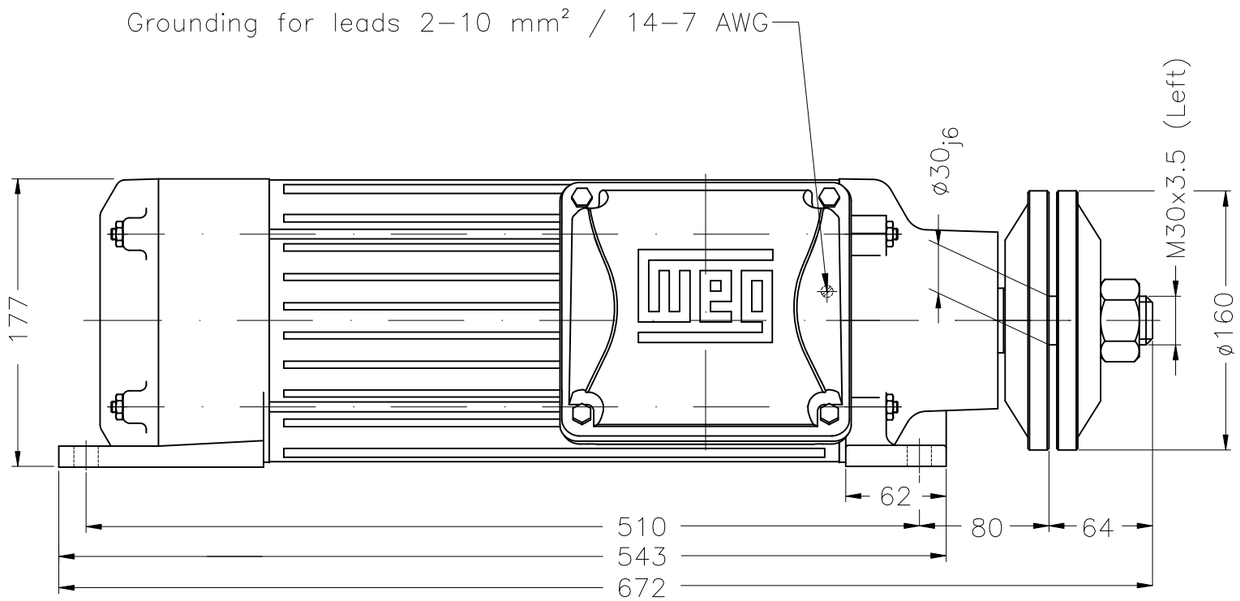

5 HP 04 Poles 60 Hz | A

ECM	LOC	SUMMARY OF MODIFICATIONS	EXECUTED	CHECKED	RELEASED	DATE	VER
			HYBRISUSER				00

EXECUTED	HYBRISUSER	THREE PH. MOTOR SAW ARBOR MOTOR	PREVIEW
CHECKED		FRAME 90L/MS IP54 TEFC	WDD 00
RELEASED			
REL. DATE		WMO Jaragua do Sul Product Engineering	SHEET 1 / 1

Color RAL 7022
Painting plan 207A
Mounting B3R(D)

Dimensions in mm

XME A3

WEG's property. Forbidden reproduction without previous authorization.