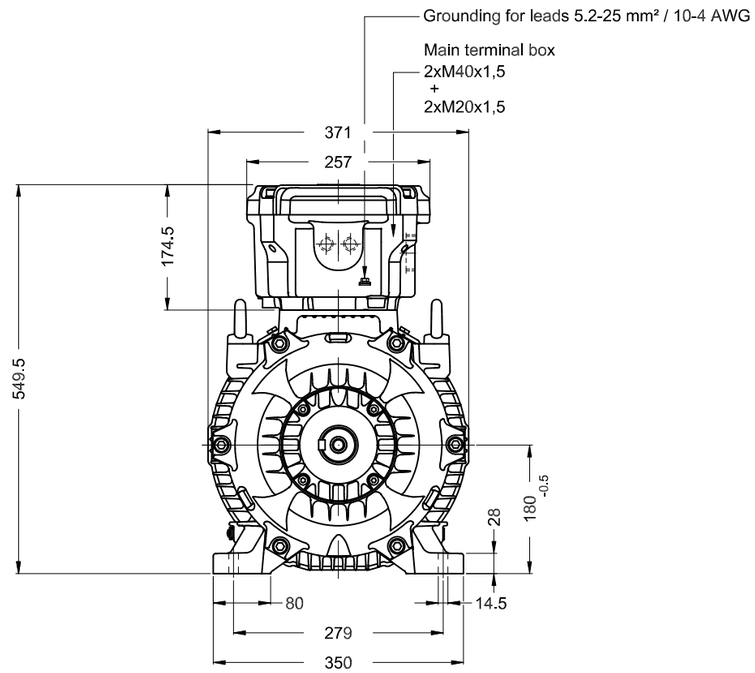

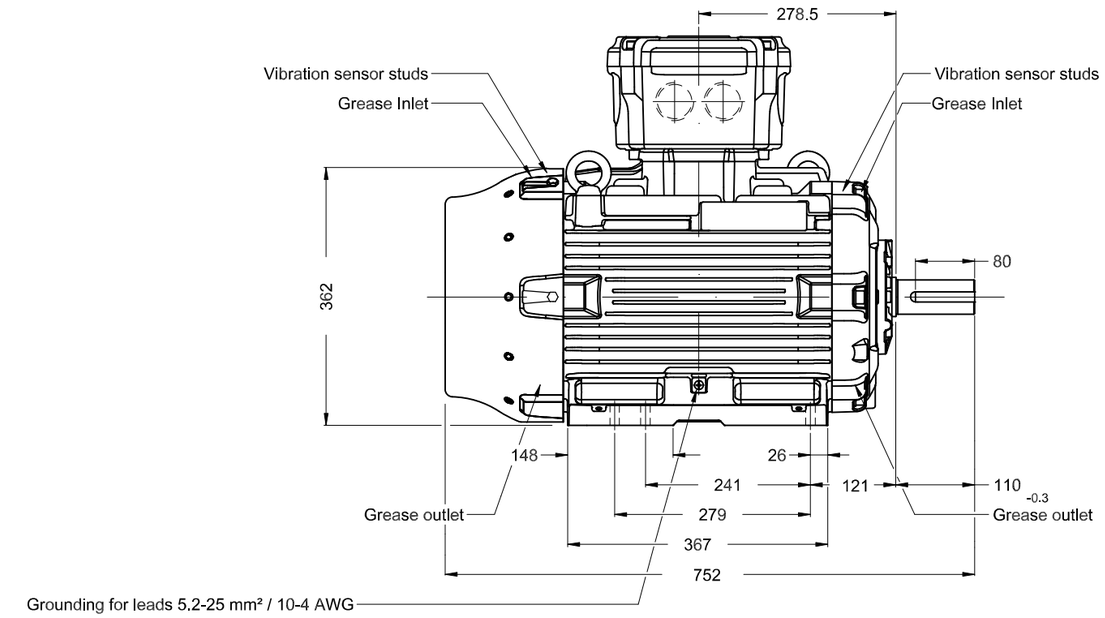

DE Shaft End

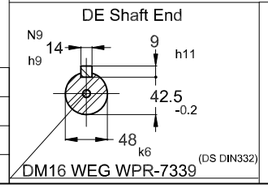

DM16 WEG WPR-7339

Vibration sensor studs detail

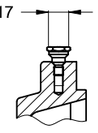

SPM studs
Color RAL 5009
Painting plan 205P
Mounting B3T

15 kW 06 Poles 50 Hz | A

ECM	LOC	SUMMARY OF MODIFICATIONS	EXECUTED	CHECKED	RELEASED	DATE	VER
			HYBRISUSER				00

EXECUTED	HYBRISUSER	THREE PH. MOTOR W22Xdb IE2	PREVIEW
CHECKED		FRAME 180M/L IP56 TEFC	WDD 00
RELEASED			
REL. DATE		WMO Jaragua do Sul Product Engineering	SHEET 1 / 1

Dimensions in mm

XME A3

WEG's property. Forbidden reproduction without previous authorization.