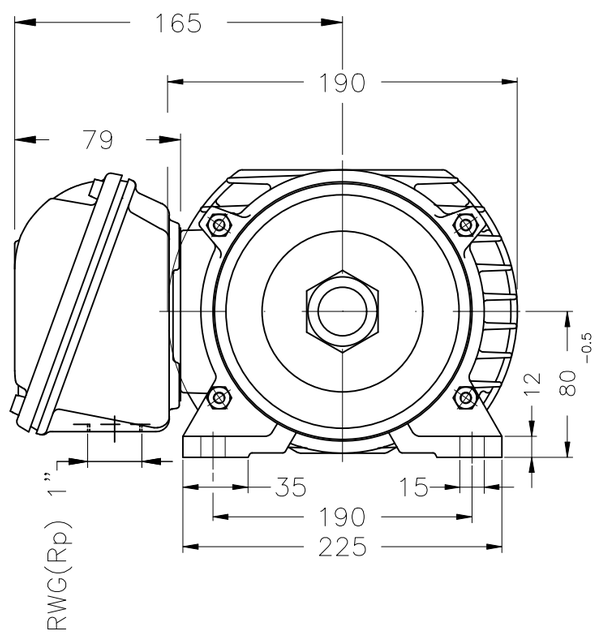


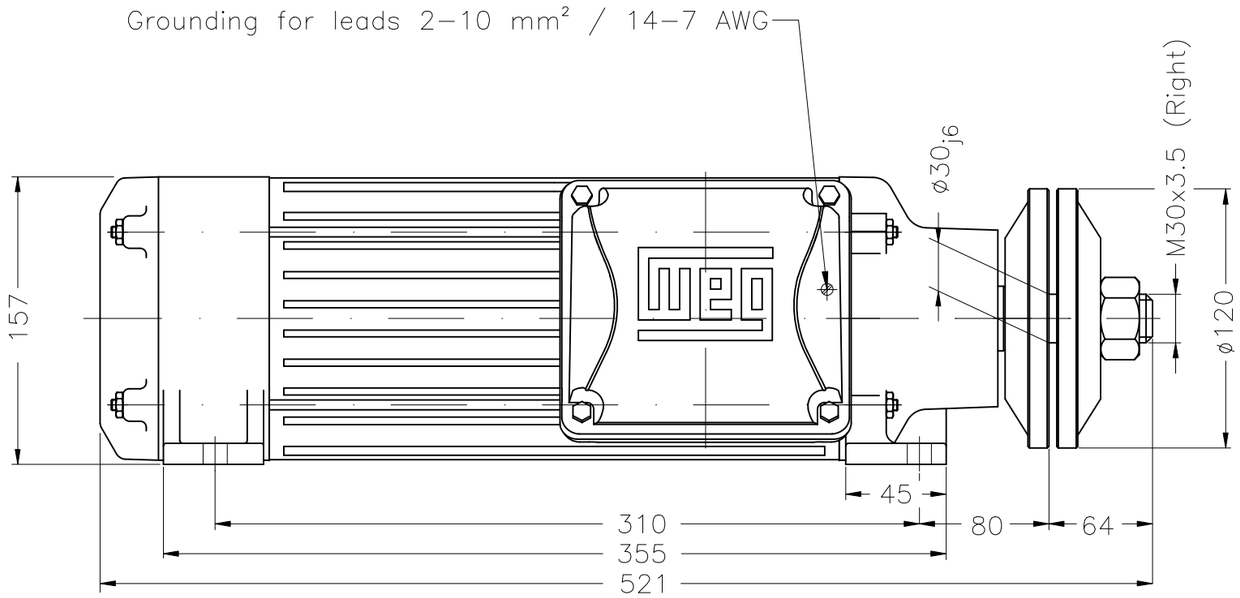


| | |
|---|---|
| Duty S6 | |
| Counterclockwise rotation | |
| Color RAL 7022 | |
| Painting plan 207A | |
| Mounting B3R(D) | |

5 HP 02 Poles 60 Hz | A

| ECM | LOC | SUMMARY OF MODIFICATIONS | EXECUTED | CHECKED | RELEASED | DATE | VER |
|---|---|---|---|---|---|---|---|
| | | | HYBRISUSER | | | | 00 |

| | | | |
|---|---|---|---|
| EXECUTED | HYBRISUSER | THREE PH. MOTOR SAW ARBOR MOTOR | PREVIEW |
| CHECKED | | FRAME 80M/MS IP54 TEFC | WDD 00 |
| RELEASED | | | |
| REL. DATE | | WMO Jaragua do Sul Product Engineering | SHEET 1 / 1 |

Dimensions in mm

XME A3

WEG's property. Forbidden reproduction without previous authorization.