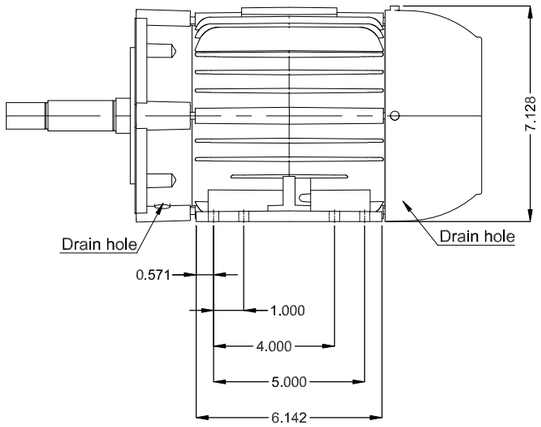

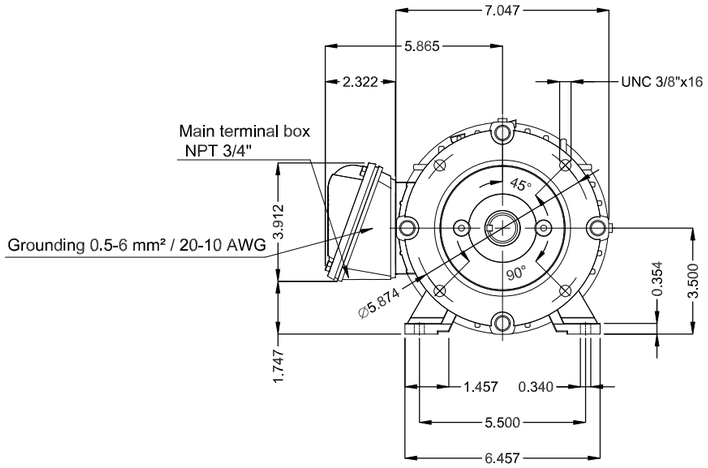

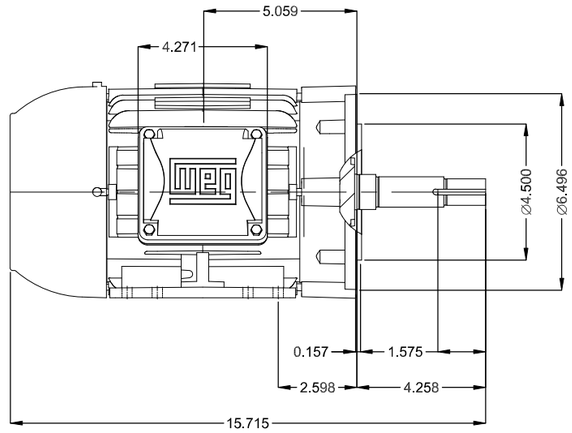

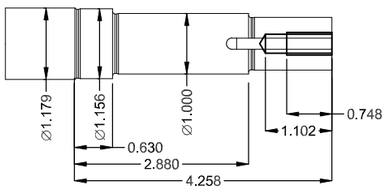

DE Shaft End

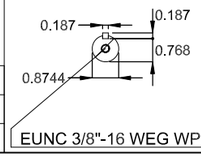

EUNC 3/8"-16 WEG WPR-7309

Color RAL 5009

Painting plan 207A

Mounting B34R(D)

1 HP 04 Poles 60 Hz | A

ECM	LOC	SUMMARY OF MODIFICATIONS	EXECUTED	CHECKED	RELEASED	DATE	VER
			HYBRISUSER				00

EXECUTED	HYBRISUSER	THREE PH. MOTOR JM/JP/JET PUMP W22 NEMA PREM. EFF.
CHECKED		FRAME 143/5JM IP55 TEFC
RELEASED		
REL. DATE		

PREVIEW

WDD 00

SHEET /

Dimensions in inches

A3

WEG's property. Forbidden reproduction without previous authorization.