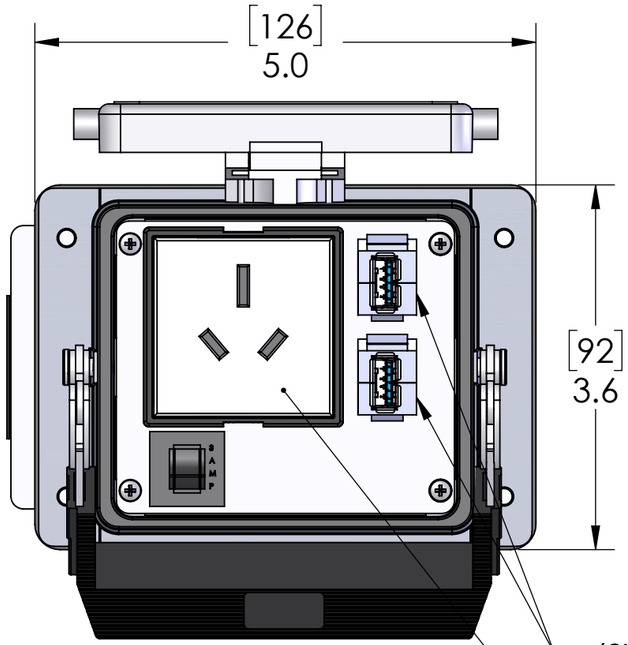

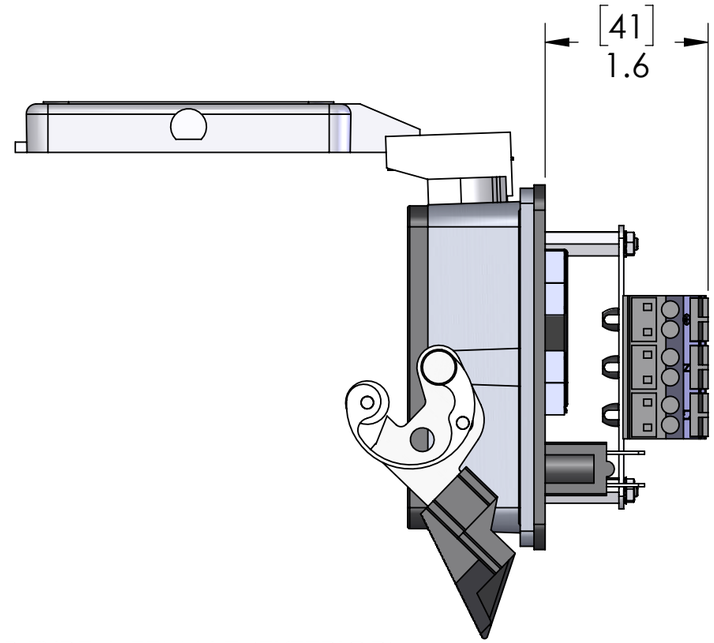

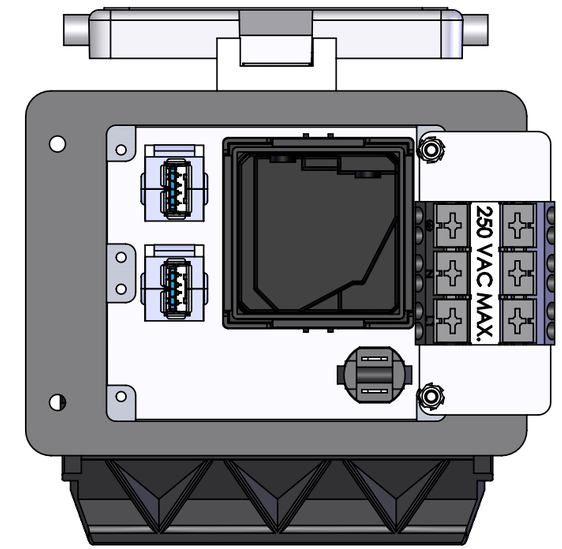

(2X) USB TYPE A FEMALE (EXTERIOR)
TO TYPE A FEMALE (INTERIOR)

AUSTRALIA, NEW ZEALAND 15A-250V TYPE I OUTLET
AS/NZS 3112, AS/NZS 4417, (AU2-15R)
NOTE: OUTLET ACCEPTS 10A and 15A
AUSTRALIAN / NEW ZEALAND PLUGS

PANEL CUTOUT

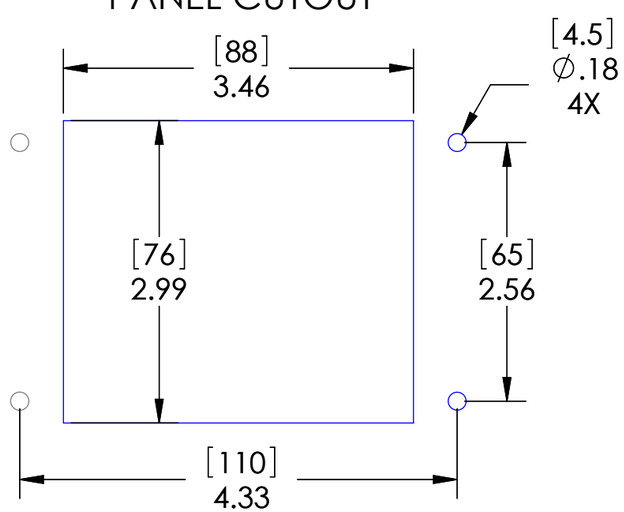

These devices shall be mounted on enclosures having adequate strength and thickness and with adequate spacing provided. Seal rating is based on mounting to a surface that is clean, flat and smooth.

HOUSING MATERIALS	
BODY:	EPOXY COATED DIE CAST ALUMINUM
GASKET:	THERMOPLASTIC ELASTOMER
HANDLE:	POLYAMIDE
LEVERS:	STAINLESS STEEL

PIC RATINGS/SPECIFICATIONS	
VOLTS:	250V
AMPS:	3A
NEMA/UL | EN 60529:	4, 4X, 12 | IP65
MOUNTING SCREW SIZE:	M4 (8-32) (304 or 316SS for 4X)
MOUNTING SCREW TORQUE:	1.2~1.8N-m (0.9~1.3 Lb-Ft)
INCOMING POWER WIRE SIZE:	0.5 ~ 4.0 sq mm / 20-12AWG
WIRE STRIP LENGTH:	10 ~ 11 mm

OPERATING TEMPERATURE: (-5°C / +50° C (+23° F / +122° F))

MOUNTING KIT ORDERED
SEPARATELY CONTAINS
M4x0.7 SS SCREW, NYLON WASHER,
SPLIT LOCKWASHER AND M4 NUT
P/N: D-PIC-MT

PROPRIETARY AND CONFIDENTIAL
THE INFORMATION CONTAINED IN THIS DRAWING IS THE SOLE PROPERTY OF MENCOM CORPORATION. ANY REPRODUCTION IN PART OR AS A WHOLE WITHOUT THE WRITTEN PERMISSION OF MENCOM CORPORATION IS PROHIBITED.

UNLESS OTHERWISE SPECIFIED:
DIMENSIONS ARE IN INCHES AND [MM]
MATERIAL
FINISH
DO NOT SCALE DRAWING

DRAWN BY	ADM
DRAWN DATE	07/14/2021
CHECKED BY	DCG
CHECK DATE	07/16/2021

COMMENTS:

MENCOM CORPORATION

TITLE:
AUS 10A RCPT; 2USB-AA; 3A; 32

SIZE	DWG. NO.	REV
B	DAS10-2USB-AFAF-R-32	B

SCALE: 2:3 | WEIGHT: | SHEET 1 OF 1